03979

SN 26314

INSTRUCTION MANUAL

MODEL 171

DIGITAL MULTIMETER

KEITHLEY INSTRUMENTS

WARRANTY

We warrant each of our products to be free from defects in material and workmanship. Our obligation under this warranty is to repair or replace any instrument or part thereof which, within a year after shipment, proves defective upon examination. We will pay domestic surface freight costs.

To exercise this warranty, call your local field representative or the Cleveland factory, DDD 216-248-0400. You will be given assistance and shipping instructions.

REPAIRS AND RECALIBRATION

Keithley Instruments maintains a complete repair service and standards laboratory in Cleveland, and has an authorized field repair facility in Los Angeles and in all countries outside the United States having Keithley field representatives.

To insure prompt repair or recalibration service, please contact your local field representative or the plant directly before returning the instrument.

Estimates for repairs, normal recalibrations, and calibrations traceable to the National Bureau of Standards are available upon request.

INSTRUCTION MANUAL

MODEL 171

DIGITAL MULTIMETER

© COPYRIGHT 1974

KEITHLEY INSTRUMENTS, INC.

28775 AURORA ROAD • CLEVELAND, OHIO 44139 • (216) 248-0400
TELEX: 98-5469 • CABLE: KEITHLEY

PRINTED IN U.S.A.

CONTENTS

SECTION	PAGE
Title Page	i
Contents	ii
List of Illustrations	iii
Specifications	iv
1. General Description	
1-1. Introduction	1
1-2. Warranty Information	1
1-3. Change Notice	1
1-4. Features	1
2. Operation	
2-1. Measurement Considerations	4
2-2. Connections	4
2-3. Controls	5
2-4. Digital Display	5
2-5. Operation as a Voltmeter	5
2-6. Operation as an Ammeter	5
2-7. Operation as an Ohmmeter	6
2-8. Overloads	6
2-9. Digital Outputs and Controls	6
2-10. Operating Technique	10
3. Circuit Description	
3-1. General	13
3-2. Analog Amplifier	13
3-3. Switching	14
3-4. Driven Guard Amplifier	15
3-5. Protection Circuits	15
3-6. Function and Range Display	15
3-7. Digital Section	15
3-8. Power Supply	18
4. Accessories	
4-1. General	20
4-2. Operating Instructions	20
4-3. Model 1712 Digital Output	20
4-4. Model 1713 Extender Card	20
4-5. Model 1007 Dual Rack Mounting Kit	20
4-6. Model 2000 Rack Mounting Kit	21
5. Maintenance	
5-1. General	22
5-2. Required Test Equipment	22
5-3. Performance Checks	22
5-4. Adjustment and Calibration	26
5-5. Component and Calibration Layouts	34
6. Replaceable Parts	
6-1. General	40
6-2. Electrical Schematics and Diagrams	40
6-3. How to Use the Parts List	40
6-4. How to Order Parts	40
6-5. Chassis Parts List	41
6-6. Electrical Parts List	41
6-7. Mechanical Parts List	61
6-8. Code-to-Name List	68
7. Schematic Diagrams	
Block Diagram, 25532C	70
Switching, Decimal and Function Display, 25531D	71
Power Supply, 25530D	72
Input Switching, Current/Ohms Protection, 25130D	73
AC Voltage Divider, 25131C	74
AC Converter, 25528C	75
Analog Switching, 25132C	76
Analog Amplifier, 25529D	77
Ohms Converter, 25133C	78
Integrator Board, 25017D	79
Tube Board, 24873D	80
Interconnect Board, 25098D	81
Wiring Diagram, 26237B	82
Printer Output (Optional Digital Output), 24866D	83

ILLUSTRATIONS

Figure No.	Title	Page
1	Model 171 Digital Multimeter	1
2	Front Panel Controls and Terminals	2
3	Rear Panel Controls and Connectors	3
4a	Complete Digital Display	5
4b	Typical Display Reading	5
5	Digital Output Connector	7
6	Output Buffer Stage	8
7	Timing Diagram	9
8	Overall Block Diagram	12
9	Analog Amplifier	13
10	Active AC Divider	13
11	AC/DC Converter	14
12	Ohmmeter Configuration	14
13	Voltmeter Configuration	14
14	Ammeter Configuration	15
15	Analog-to-Digital Converter	17
16	A-to-D Converter Block Diagram	19
17	Model 1007 Dual Rack Mounting Kit - Exploded View	21
18	Model 2000 Rack Mounting Kit - Exploded View	21
19	Cutaway View Showing PC-Board Locations	23
20	Calibration Adjustments and Test Points with Cal Cover	32
21	Calibration Adjustments and Test Points without Cover	33
22	Component Layout - Analog Board - PC-303	34
23	Component Layout - Clock Board - PC-300	34
24	Component Layout - Mother Board - PC-305	35
25	Component Layout - Switch Board - PC-304	36
26	Component Layout - Integrator Board - PC-301	37
27	Component Layout - Tube Board - PC-299	38
28	Component Layout - Optional Digital Output - PC-275	39
29	Chassis Assembly - Exploded View	42
30	Bottom Cover Assembly - Exploded View	42

SPECIFICATIONS

calibrated at 25°C

AS A DC VOLTMETER

RANGE: ±1 microvolt per digit (10 mV full range) to ±1000 volts in six decade ranges. 100% overranging to 19999 on all except the 1000-volt range.

ACCURACY (90 days): ±(0.02% of reading ±0.01% of range) except on the 10-millivolt range where it is ±(0.02% +0.02%).

TEMPERATURE COEFFICIENT: ±(0.003% of reading +0.001% of range)/°C.

INPUT RESISTANCE: Greater than 1000 megohms on the 10-millivolt through 1-volt ranges, 10 megohms on the 10-volt to 1000-volt ranges.

SETTLING TIME: Less than 2 seconds to rated accuracy with less than 100 kilohms source resistance.

REJECTION:

NMRR: Greater than 70 dB, 50 Hz to 180 Hz at 10 Hz multiples.

CMRR: Greater than 100 dB with 1 kilohm unbalance, dc to 180 Hz at 10 Hz multiples.

MAXIMUM SAFE INPUT: ±1400 volts peak momentary, 1000 V dc or rms ac continuous.

AS A DC AMMETER

RANGE: ±0.1 nanoampere per digit (1μA full range) to ±2 amperes in seven decade ranges. 100% overranging to 19999 on all ranges.

ACCURACY (90 days): ±(0.05% of reading +0.03% of range). Self heating due to long term application of 2 amperes will cause less than 0.1% additional error on the 1-ampere range.

TEMPERATURE COEFFICIENT: ±(0.005% of reading +0.002% of range)/°C.

INPUT VOLTAGE DROP: 100 millivolts at full range on the lower ranges increasing to approximately 500 millivolts on the 1-ampere range.

MAXIMUM SAFE INPUT: 3 amperes, internally fused beyond 3 amperes.

AS AN OHMMETER

RANGE: 0.1 ohm per digit (1 kΩ full range) to 2000 megohms in seven decade ranges. 100% overranging to 19999 on all ranges.

ACCURACY (90 days): ±0.05% of reading for 1-kilohm through 1-megohm ranges; ±0.2% of reading on the 10-megohm ranges; ±3% of reading on the 100-megohm range; ±20% of reading on the 1000-megohm range (±0.02% of range on all ranges).

TEMPERATURE COEFFICIENT: ±(0.008% of reading +0.002% of range +0.0003% of reading per megohm)/°C.

SETTLING TIME: Less than 2 seconds to rated accuracy up to 1 megohm.

CONFIGURATION: Two-terminal, constant current.

VOLTAGE ACROSS UNKNOWN: 100 mV for full range on the 1-kilohm to 100-kilohm ranges, 1V maximum open circuit. 1 volt for full range on the 1-megohm to 1000-megohm ranges, 5 volts open circuit.

MAXIMUM OVERLOAD: 250 volts rms on the 100-kilohm to 1000-megohm ranges. Diode clamped to protect the 1 and 10-kilohm ranges (internally fused beyond 3 amps)

AS AN AC VOLTMETER

RANGE: 10 microvolts per digit (100 mV full range) to 1000 volts rms in five decade ranges. 100% overranging to 19999 on all except the 1000-volt range.

ACCURACY (90 days):

1V-100V range ±(0.3% of reading +0.04% of range) 40 Hz-40kHz

100mV range ±(0.4% of reading +0.2% of range) 40 Hz -10kHz; ±3% of full range to 100kHz on the 100 mV and 1V ranges

1kV range ±(0.4% of reading +0.04% of range) 40 Hz-10kHz

(Average reading, calibrated in rms of a sine wave.)

TEMPERATURE COEFFICIENT: ±[0.35% of reading +0.003% of range (0.008% on 100-mV range)]/°C.

INPUT IMPEDANCE: 1 MΩ shunted by approximately 100 pF.

SETTLING TIME: Less than 3 seconds except for ac superimposed on dc.

MAXIMUM SAFE INPUT: 1000-volts dc or rms ac (1500 volts peak) 10-volt to 1000-volt range, 300 volts rms (450 volts peak) on the 100-mV and 1-volt ranges.

AS AN AC AMMETER

RANGE: 0.1 nanoampere per digit (1μA full range) to 2 amperes rms, in seven decade ranges. 100% overranging to 19999 on all ranges.

ACCURACY (90 days): ±(1.5% of reading +0.1% of range) 40 Hz to 10kHz on the 100-microampere to 1-ampere ranges, decreasing to 40 Hz to 120 Hz on the 1-microampere range (average reading, calibrated in rms of a sine wave).

TEMPERATURE COEFFICIENT: ±(0.04% of reading +0.008% of range)/°C.

INPUT VOLTAGE DROP: 100 millivolts at full range on the lower ranges increasing to approximately 500 millivolts on the 1-ampere range.

MAXIMUM SAFE INPUT: 3 amperes, internally fused beyond 3 amperes.

GENERAL

ZERO STABILITY: ±(0.0005% of range +0.3 μV)/°C.

ANALOG OUTPUT: ±1 volt at up to 1 milliampere for full range input, 100% overranging on all ranges except the 1000-volt ranges.

POLARITY: Automatic.

OFFSET CURRENT: Typically less than 10 picoamperes.

DISPLAY: 4 digits plus 1 overrange digit; appropriate decimal location; function in engineering units; polarity and overload indication; 2 readings/second.

ISOLATION: Circuit ground to chassis ground: greater than 100 megohms shunted by less than 0.02 microfarad. Circuit ground may be floated up to 500 volts with respect to chassis ground in all modes. Maximum safe voltage between input and chassis ground: 1500 volts peak.

WARMUP TIME: 45 minutes to within twice specified accuracy; 2 hours for complete stabilization.

OPERATING ENVIRONMENT: 0° to 35°C up to 80% R. H.

CONNECTORS: Input, chassis ground; binding posts. Analog output; Amphenol 80-PC2F.

POWER: 105-125 or 210-250 volts (switch selected), 50-60 Hz, 25 watts.

DIMENSIONS,WEIGHT: Style M 3-1/2 in. half-rack, overall bench size 4 in. high x 8-1/2 in. wide x 15-1/4 in. deep (100 x 217 x 385 mm). Net weight, 10 pounds (4,6 kg).

ACCESSORIES SUPPLIED: Mating output connector, spare input fuse.

SECTION 1. GENERAL DESCRIPTION

1-1. INTRODUCTION. The Model 171 AC/DC Digital Multimeter (Figure 1) is a highly versatile 4-1/2 digit instrument capable of handling virtually every measurement that will ever be encountered in most lab or production-line facilities. The 171 measures 1 microvolt to 1000 volts dc, 10 microvolts to 1000 volts ac, 100 picoamperes to 2 amperes ac and dc, and 100 milliohms to 2000 megohms. Thirty of the thirty-two total ranges of the Model 171 are capable of 100% overranging, the two exceptions being the highest voltage ranges. This allows the user to accurately exceed a full-scale reading without having to immediately change range. The overrange "1" digit of the 171 DMM essentially gives 5-digit precision to a reading. To prevent reading errors when beyond the allowable overrange capability (19999) of the 171, the last four digits of the display will blank. The Model 171 provides better than 70 dB rejection of line frequency noise that may be superimposed on a dc input signal while maintaining less than 2 seconds settling time.

1-2. WARRANTY INFORMATION. The warranty is given on the inside front cover of this Manual. If there is ever a need for in-warranty or out-of-warranty factory service, fill out the REPAIR AND CALIBRATION FORM that is supplied at the back of this Manual. Return the completed form and instrument to the address provided.

1-3. CHANGE NOTICE. If there are any improvements or changes to the Model 171 that are not incorporated into this Manual, these will be explained on a yellow Change Notice attached to the inside back cover.

1-4. FEATURES.

a. Direct-Reading Display. The decimal point and engineering units of a reading are automatically shown

b. Thirty-two Ranges. The 171 provides six ranges of dc voltage, five ranges of ac voltage, and seven ranges each of dc and ac current and resistance.

c. High NMRR and CMRR Rejection. The 171 provides better than 70 dB NMRR and 100 dB CMRR while maintaining a fast settling time of less than 2 seconds.

d. Analog Output. The 171 has a 1-volt full scale output as a standard feature which allows continuous monitoring of analog data on a chart recorder or similar device.

e. Optional Digital Output. The 171 also can be used with the optional Model 1712 Digital Output accessory which includes complete timing outputs and remote controls.

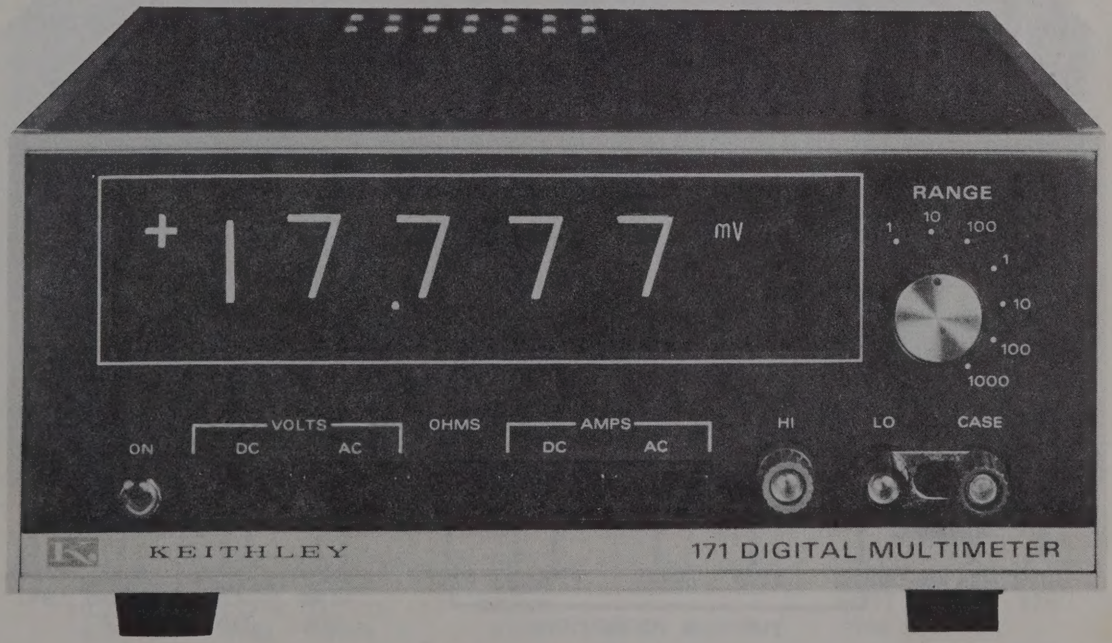

FIGURE 1. Model 171 Digital Multimeter

TABLE 1-1.
Front Panel Controls and Terminals

Control	General Description	Paragraph
ON	Turns on instrument power	2-3a
VOLTS-DC	Sets dc-voltage function	2-3c
VOLTS-AC	Sets ac-voltage function	2-3c
OHMS	Sets ohms function	2-3c
AMPS-DC	Sets dc-ampere function	2-3c
AMPS-AC	Sets ac-ampere function	2-3c
RANGE	Sets instrument sensitivity	2-3b
Terminal		
HI	Input high, red binding post, internally guarded	2-2a
LO	Input low, black binding post	2-2a
CASE	Chassis ground, green binding post	2-2a

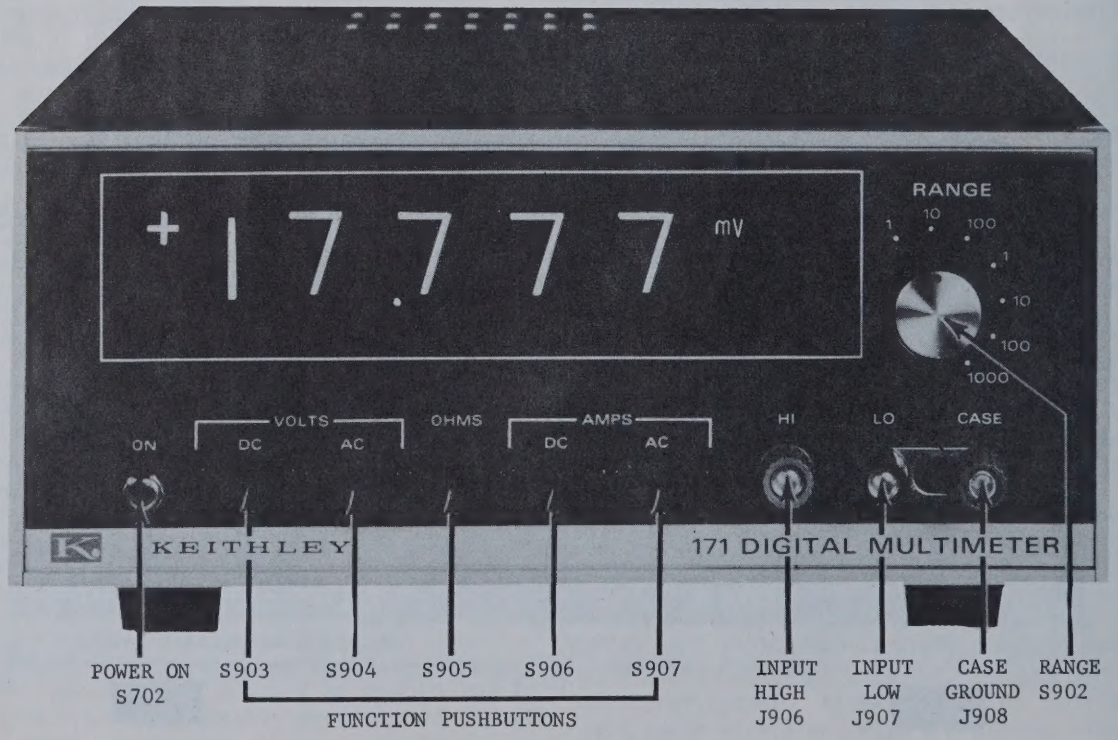

FIGURE 2. Front Panel Controls and Terminals.

TABLE 1-2.
Rear Panel Controls and Connectors

Control	Functional Description	Paragraph
ZERO	Adjusts input zero suppression	2-1a1
LINE Switch	Sets instrument for either 117 or 234V line	2-10a1
FUSE	117V: 1/2 ampere, type 3AG, slow-blow 234V: 1/4 ampere, type 3AG, slow-blow	2-10a2
Connector		
OUTPUT	Analog output, 1V for full range	2-2b
BCD OUTPUT	Provides digital outputs with Model 1712 installed as shown (connector not provided without Model 1712)	2-9a
LINE Input	Receptacle mates with 3-wire line cord	2-10a3

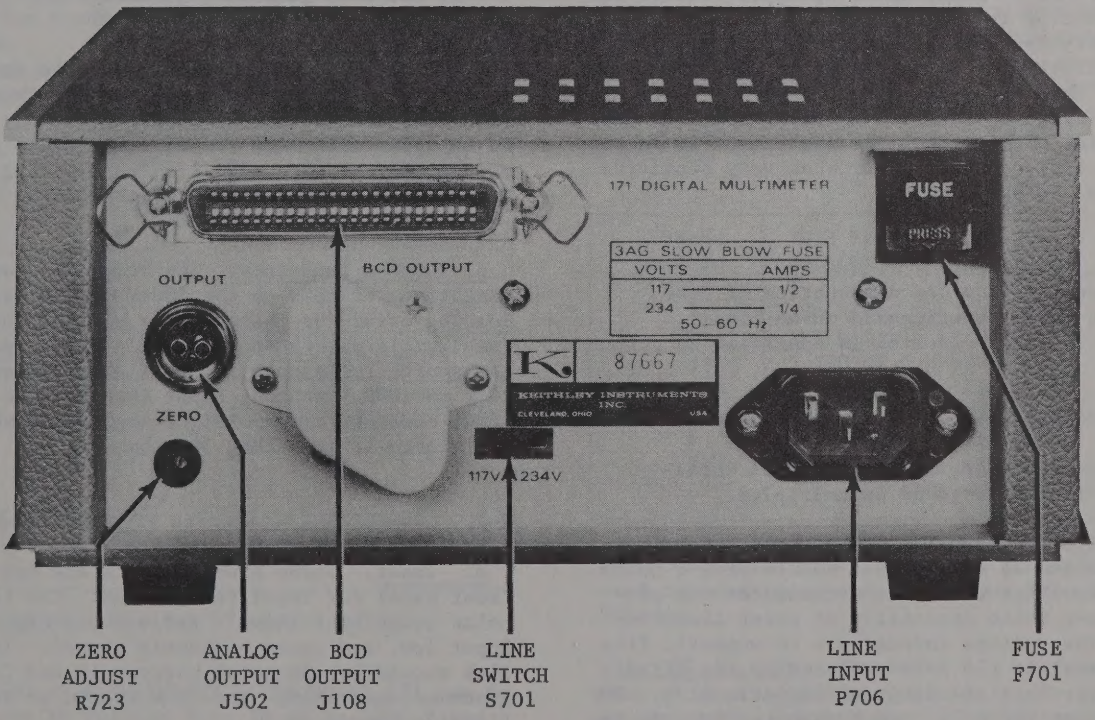

FIGURE 3. Rear Panel Controls and Connectors.

SECTION 2. OPERATION

2-1. MEASUREMENT CONSIDERATIONS.

a. Noise Considerations. The limit of resolution in voltage and current measurements is determined largely by the noise generated in the source. Stray low-level noise is present in some form in nearly all electrical circuits. The instrument does not distinguish between stray and signal voltages since it measures the net voltage. When using the 100 mV and 10 mV ranges, consider the presence of low-level electrical phenomena such as thermocouples (thermoelectric effect), flexing of coaxial cables (triboelectric effect), apparent residual charges on capacitors (dielectric absorption), and battery action of two terminals (galvanic action).

1. Thermal EMFs. Thermal emfs or thermoelectric potentials are generated by thermal differences between two junctions of dissimilar metals. To minimize the drift caused by thermal emfs, use copper leads to connect the circuit to the instrument. The rear panel ZERO control can be used to buck out a constant thermal offset voltage if necessary. The Keithley accessory Model 1483 Low Thermal Connection Kit contains all necessary materials for making very low thermal copper crimp connections for minimizing thermal effects.

2. A-C Electric Fields. The presence of electric fields generated by power lines or other sources can have an effect on instrument operation. A-C voltages which are very large with respect to the full-scale range sensitivity could drive the a-c amplifier into saturation, thus producing an erroneous d-c output. Proper shielding as described in paragraph 2-1b can minimize noise pick-up when the instrument is in the presence of large a-c fields or when very sensitive measurements are being made.

NOTE

The instrument provides attenuation of line frequency noise superimposed on an input signal. The a-c rejection is specified as follows:

NMRR: Greater than 70 dB for a voltage of 50 Hz to 180 Hz at 10 Hz multiples.
CMRR: Greater than 100 dB with 1 kΩ unbalance, dc to 180 Hz at 10 Hz multiples.

3. Magnetic Fields. The presence of strong magnetic fields can be a potential source of a-c noise. Magnetic flux lines which cut a conductor can produce large a-c noise especially at power line frequencies. The voltage induced due to magnetic flux is proportional to the area enclosed by the circuit as well as the rate of change of magnetic flux. For example, the motion of a 3-inch diameter loop in the earth's magnetic field will induce a signal of several tenths of a microvolt. One way to minimize magnetic pickup is to arrange all wiring so that the loop area enclosed is as small as possible (such as twisting input leads).

b. Shielding.

1. Electric Fields. Shielding is usually necessary when the instrument is in the presence of very large a-c fields or when very sensitive measurements are being made. The shields of the measurement circuit and leads should be connected together to ground at only one point. This provides a "tree" configuration, which minimizes ground loops.

2. Magnetic Fields. Magnetic shielding is useful where very large magnetic fields are present. Shielding, which is available in the form of plates, foil or cables, can be used to shield the measuring circuit, the lead wires, or the instrument itself.

3. Other Considerations.

a) Voltmeter Measurements. Use shielded input leads when source resistances are greater than 1 Kilohm or when long input cables are used.

b) Current Measurements. On the mA and μA current ranges, no special shielding precautions need be taken. However, on the 1 microampere range, shielded input leads are recommended.

c) Resistance Measurements. Shielding of input leads and source are recommended for measurements on the 10 megohm through 1000 megohm ranges to prevent erroneous readings.

c. Floating. The circuit ground to chassis ground isolation is greater than 100 megohms shunted by less than 0.02 microfarad. Circuit ground may be floated up to ±500 volts with respect to chassis ground in all modes. To use the Model 171 for floating measurements, disconnect the shorting link between the LO and CASE terminals on the front panel.

d. Source Impedance. The Model 171 has an input resistance of $10^9\Omega$ on the 10 mV to 1-V ranges. The loading error for these ranges will be less than 0.003% (negligible with respect to full scale readings) when the source resistance is 30 kilohm or less. On the 10 V to 1000 V ranges, input impedance is greater than $10^7\Omega$. Loading error will be negligible when the source resistance is less than 300 ohms.

2-2. CONNECTIONS. (refer to Figures 2 and 3)

a. Input. Three binding posts are provided on the front panel for input connections. The terminals are color coded as follows: red = input high, black = input low, and green = chassis ground. The shorting link should be connected between LO and CASE for grounded operation. The link should be removed for floating operation.

b. Analog Output. The output receptacle (J502) on the rear panel is an Amphenol type 80PC2F. The mating connector (supplied) is an Amphenol type 80MC2M (Keithley CS-33).

c. Digital Output. This output is available as an optional accessory when ordering the Model 1712 Digital Output. The receptacle is a 50-pin Amphenol Micro-Ribbon type 57-40500 (J108). The mating connector is an Amphenol type 57-30500 (Keithley CS-220). The output pin functions are identified in Table 2-7.

2-3. CONTROLS. (refer to Figure 2)

a. Power Switch (S702). This toggle switch controls the line power to the instrument. (The lighted display serves as a pilot lamp when the switch is placed to "ON".)

b. Range Switch (S902). This rotary switch sets the RANGE sensitivity in seven positions. As the switch is rotated, the decimal point and units designator are automatically indicated on the display along with the digits. When initially making a measurement, the range switch should be rotated fully clockwise to the least sensitive range. Then the switch may be rotated counterclockwise to obtain a suitable display.

c. Function Pushbuttons (S903,04,05,06,07). Each pushbutton switch is designed so that when any single button is depressed, the remaining buttons are released automatically. To select the measured parameter, depress the corresponding pushbutton.

NOTE

If fuse F901 is blown, instrument will be inoperable on all functions.

2-4. DIGITAL DISPLAY. The display is composed of four digits, an overrange "1", a moveable-position decimal point, and units designation, as shown in Figure 4a. A typical display reading is shown in Figure 4b. The reading corresponds to an input of -123.45 mV dc.

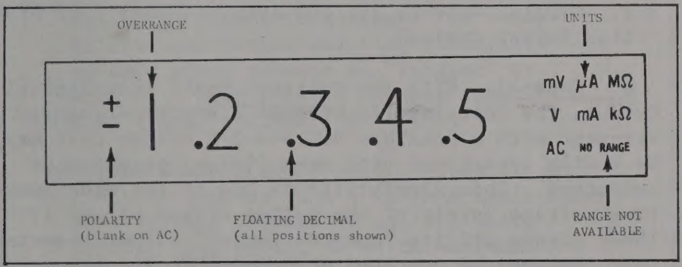

FIGURE 4a. Complete Digital Display.

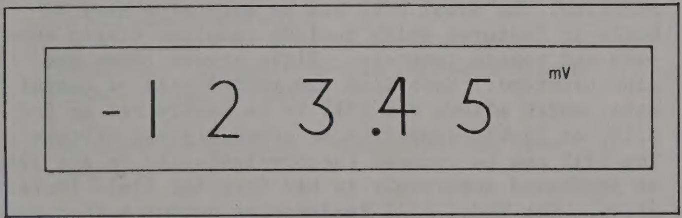

FIGURE 4b. Typical Display Reading.

2-5. OPERATION AS A VOLTMETER. The Model 171 can be used to measure ac voltage from 10 µV to 1000 V rms and dc voltage from ±1 µV to ±1000 V.

a. DC Volts. The Model 171 has six ranges from ±10 mV to ±1000 V full scale. To select the dc voltage mode, depress "DC VOLTS" pushbutton. The range switch has six positions of sensitivity as shown in Table 2-1. The full range is indicated on the display by the position of the decimal point and the "V" or "mV" units designation as shown in the example of Figure 4. When the range switch is rotated fully counterclockwise, the digits in the display will blank and a "NO RANGE" designation will appear. Although the display will indicate up to ±1999.9 V, the maximum continuous input voltage permitted is ±1000.0V.

TABLE 2-1.
DC Voltage Ranges

Range Position	Full Range Sensitivity	Full Range Display	Overrange Display
1	NO RANGE	blank	blank
2	10 mV	±X9.999 mV	±19.999 mV
3	100 mV	±X99.99 mV	±199.99 mV
4	1 V	±X.9999 V	±1.9999 V
5	10 V	±X9.999 V	±19.999 V
6	100 V	±X99.99 V	±199.99 V
7	1000 V	±X999.9 V	±1000.0 V*

*maximum allowable continuous voltage

b. AC Volts. The Model 171 has five ranges from 100 mV to 1000 V rms full scale. To select the ac voltage mode, depress the "AC VOLTS" pushbutton. The range switch has five positions of sensitivity as shown in Table 2-2. The full range is indicated by the position of the decimal point and the "V" or "mV" display. When the range switch is rotated fully counterclockwise, the digits in the display will blank and a "NO RANGE" designation will appear. Although the display will indicate up to 1999.9 V rms, the maximum input voltage permitted is 1000 V rms. The Model 171 uses an average sensing, RMS-calibrated ac-to-dc converter. Note that the "AC" display will also light.

TABLE 2-2.
AC Voltage Ranges

Range Position	Full Range Sensitivity	Full Range Display	Overrange Display
1	NO RANGE	blank	blank
2	NO RANGE	blank	blank
3	100 mV	X99.99 mV	199.99 mV
4	1 V	X.9999 V	1.9999 V
5	10 V	X9.999 V	19.999 V
6	100 V	X99.99 V	199.99 V
7	1000 V	X999.9 V	1000.0 V*

*maximum allowable voltage

2-6. OPERATION AS AN AMMETER. The Model 171 can be used to measure ac and dc current from 0.1 nA to 2000 mA.

a. DC Amperes. The Model 171 has seven ranges from ±1 µA to ±1000 mA full scale. To select the dc amperes mode, depress the "DC AMPS" pushbutton. The range switch has seven positions of sensitivity as shown in Table 2-3. The full range is indicated by the position of the decimal point and the "mA" or "µA" display. Polarity is indicated automatically.

TABLE 2-3.
AC & DC Current Ranges

Range Position	Full Range Sensitivity	Full Range Display	Overrange Display
1	1 μA	X.9999 μA	1.9999 mA
2	10 μA	X9.999 μA	19.999 mA
3	100 μA	X99.99 μA	199.99 mA
4	1 mA	X.9999 mA	1.9999 mA
5	10 mA	X9.999 mA	19.999 mA
6	100 mA	X99.99 mA	199.99 mA
7	1000 mA	X999.9 mA	1999.9 mA

b. AC Amperes. The Model 171 has seven ranges from 1 μA to 1000 mA rms full scale. To select the ac amperes mode, depress the "AC AMPS" pushbutton. The range switch has seven positions of sensitivity as shown in Table 2-3. The full range is indicated by the position of the decimal point and the "mA" or "μA" display. The Model 171 uses an average sensing, RMS-calibrated ac-to-dc converter. Note that the "AC" display will also light.

2-7 OPERATION AS AN OHMMETER. The Model 171 can be used to measure resistance from 0.1 ohm per digit to 2000 megohms. To select the ohmmeter mode, depress the "OHMS" pushbutton. The range switch has seven positions of sensitivity as shown in Table 2-4. The full range is indicated by the position of the decimal point and the "MΩ" or "kΩ" display.

TABLE 2-4.
Ohms Ranges

Range Position	Full Range Sensitivity	Full Range Display	Overrange Display
1	1 kΩ	X.9999 kΩ	1.9999 kΩ
2	10 kΩ	X9.999 kΩ	19.999 kΩ
3	100 kΩ	X99.99 kΩ	199.99 kΩ
4	1 MΩ	X.9999 MΩ	1.9999 MΩ
5	10 MΩ	X9.999 MΩ	19.999 MΩ
6	100 MΩ	X99.99 MΩ	199.99 MΩ
7	1000 MΩ	X999.9 MΩ	1999.9 MΩ

The Model 171 uses a two-terminal constant current technique for measurement of resistance. The voltage and current applied to the unknown is described in Table 2-5.

TABLE 2-5.
Voltage & Current Applied to Unknown

Range	Voltage Applied Full Scale	Current Applied	Voltage Applied Open Circuit	Power Dissipated in Unknown
1 kΩ	100 mV	100 μA	2 V	10 μW
10 kΩ	100 mV	10 μA	2 V	1 μW
100 kΩ	100 mV	1 μA	2 V	0.1 μW
1 MΩ	1 V	1 μA	12 V	1 μW
10 MΩ	1 V	100 nA	12 V	0.1 μW
100 MΩ	1 V	10 nA	12 V	0.01 μW
1000 MΩ	1 V	1 nA	12 V	0.001 μW

2-8. OVERLOADS. The Model 171 has been designed to withstand overloads without permanent damage to the instrument. However, care should be taken so as not to exceed the specified maximums.

a. DC Voltage Rating. The maximum input which may be applied in the dc volts mode is ±1400 volts peak momentary, 1000 volts dc or rms ac continuous.

b. AC Voltage Rating. The 10 to 1000-volt ac ranges are protected from inputs up to 1000 volts rms (1500 volts peak). The 100 millivolt and 1 volt ranges have overload protection to 300 volts rms (450 volts peak).

c. AC and DC Amperes Rating. The ac and dc current ranges of the 171 are automatically protected from overloads to 3 amperes without sustaining circuit damage. An internal fuse F901 (Keithley FU-39) protects all current ranges from overloads exceeding 3 amperes. Fuse F901 is located on Mother Board.

d. Ohms Rating. The 100-kilohm to 1000-megohm ranges are overload protected to 250 volts rms, with a power-diode clamp protecting the 1 and 10-kilohm ranges. The internal fuse (Keithley FU-39) that protects the current ranges of the 171 also protects the 1 and 10-kilohm ranges for overloads in excess of 3 amperes. Fuse F901 is located on Mother Board. (See Figure 21).

e. Overload Indication. To prevent reading errors when beyond the allowable capability (1-9-9-9-9) of the 171, the last four digits of the display will blank (the overrange "1" will remain lit). To restore the Model 171 to a normal display, rotate the range switch (S902) clockwise to a less sensitive range. If this does not restore a normal display, immediately decrease the input.

2-9. DIGITAL OUTPUTS AND CONTROLS. (Model 1712 Digital Output Option).

a. General. With the optional Model 1712 Digital Output, the Keithley 171 becomes a systems-oriented instrument with a flexible BCD 8-4-2-1 output that may be easily interfaced with many digital printers or computers. This flexibility is due to the wide operating voltage levels of the buffer stages of the 1712. These stages utilize "open collector" output transistors that may be operated at common DTL and TTL voltage levels as well as others up to +12 volts. In addition, the Model 1712 has an extensive list of built-in features which include complete timing outputs and remote controls. Eight strobe lines are also provided. Each line controls 4 bits of output data, which allows the 1712 to be easily set up for 8,12, or 16-bit computers or other digital devices. The 1712 can be ordered factory-installed in the 171, or purchased separately in kit form for field installation. The Model 1712 includes an output-buffer module, pre-wired 50-pin receptacle (J108), wiring harness, and mating 50-pin connector (not wired).

b. Specifications. Reference Table 2-6.

c. Output Connector Pin Identification. Refer to Table 2-7 and Figure 5. The 50-pin BCD-output receptacle (J108) of the Model 171 is an Amphenol Micro-Ribbon type 57-40500 (Keithley CS-221). The supplied mating connector is an Amphenol Micro-

TABLE 2-6.
Specifications
Model 1712 Digital Output

DIGITAL OUTPUT: BCD (8421) open collector logic (Motorola MC 858P) represents each of 4 digits (0000=0), overrange digit, overload ("1"), polarity (+ = "1"), function and four decimal positions.

TIMING OUTPUTS: Clock: 100 kHz pulses. Count Interval: Logic "0" appears during count interval (i.e. pulse width is proportional to analog input signal). Flag ($\overline{\text{Flag}}$): Logic "1" ("0") appears for a 300-millisecond interval out of a conversion time of 500 milliseconds. No change in digital output is made during this interval.

OUTPUT LOGIC LEVELS: Output Logic "1" ≡ open transistor collector to ground with less than 100 microamperes leakage. +6 volts maximum allowable applied voltage. Output Logic "0" ≡ transistor switch closure to ground with less than 0.5-volt saturation voltage at +35 milliamperes sink current.

REMOTE CONTROLS: Strobe: 8 lines permit word serializing in 4-bit increments or multiples thereof. Open circuit inhibits controlled output lines from conducting (closure enables conduction). Hold: Closure retains result of last conversion in both the digital output and the display. Hold #2: Closure halts conversions at end of present conversion holding reading in both the digital output and the display. Trigger: Release edge of pulsed closure initiates one conversion when in Hold #2. Signal is averaged for a 200-millisecond period starting 100 milliseconds after release of "Trigger" or Hold #2. Flag Reset: Closure sets Flag ($\overline{\text{Flag}}$) to logic "0" ("1").

REQUIRED CONTROL LOGIC LEVEL: Open Circuit ≡ either greater than 4 kilohms resistance or a voltage between +2 and +12 volts (except flag reset, +5 volts maximum) referenced to ground. Closure ≡ closure to ground within 0.5 volt while sinking +2.5 milliamperes.

CONNECTOR: Output: 50-pin Amphenol Micro-Ribbon type 57-40500.

ACCESSORIES SUPPLIED: Output mating connector.

ACCESSORIES AVAILABLE:
Model 4405 Terminal Box: 3 ft. (1m) cable, connector, and 50-terminal box.
Model 1801 Output Cable: 10 ft. (3m) cable, with 50-pin connectors and mating panel-mount connector.

Ribbon type 57-30500 (Keithley CS-220). The optional Model 4405 Terminal Box and Model 1801 Output Cable (see Table 2-6) are ideal interfacing accessories. For applications where the Model 1712 must be temporarily interfaced to a printer with a special input connector, for example, the Model 4405 allows easy screw-terminal access to all 50 pins of the Model 1712 Digital Output.

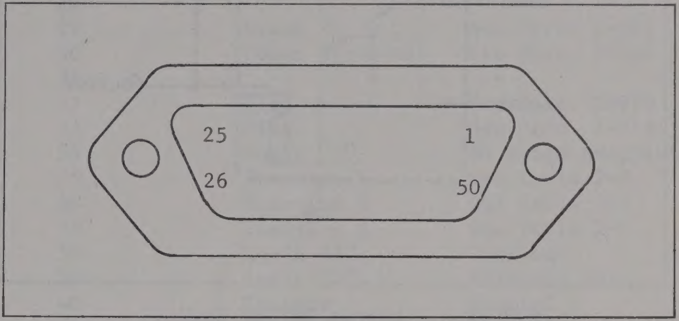

FIGURE 5. Digital Output Connector.

d. Open Collector Output. (Refer to Figure 6). Interfacing the Model 171 to automatic data acquisition systems is made easy with the "open collector" output buffer stages of the 1712. The "open collector" gate of the Model 1712 switches impedance, rather than voltage, from high to low levels. This permits the user to determine his own voltage level difference between logic states "1" and "0" as determined by the "reading" logic gate of the digital reading device (printer, computer, etc.). Any logic voltage level up to + 6 volts (+ V_{ext}) may be applied to the collector of each output transistor of the Model 1712. Logic state "1" is defined as an open transistor collector to ground with less than 100 microamperes leakage; + 6 volts maximum allowable applied voltage. Logic state "0" is defined as a transistor switch closure to ground with less than 0.5 volt saturation voltage at + 35 millimaperes sink current. The "open collector" feature of the Model 1712 Digital Output is compatible with a wide variety of logic types including TTL, DTL, and RTL. In the case of RTL and some other logic types, a pull-up resistor (R) is needed to define logic state "1". For more information on digital interfacing, contact your Keithley Representative or the factory for your copy of our Product Notes "Interfacing Digital Instruments". It encompasses not only the basics of digital coding, but also the types of logic in use today by most digital equipment manufacturers including Keithley.

e. Timing Diagram. The timing diagram of the Model 1712, shown as Figure 7, illustrates the time and sequence of the overall analog-to-digital (A-to-D) conversion cycle in relationship with the 1712 Digital Output.

1. Integrate Period. During the "INTEGRATE" period, the analog signal is applied to the integrating amplifier. The ramp waveform of the "INTEGRATOR" could have a positive or negative slope, depending on the polarity of the input signal.

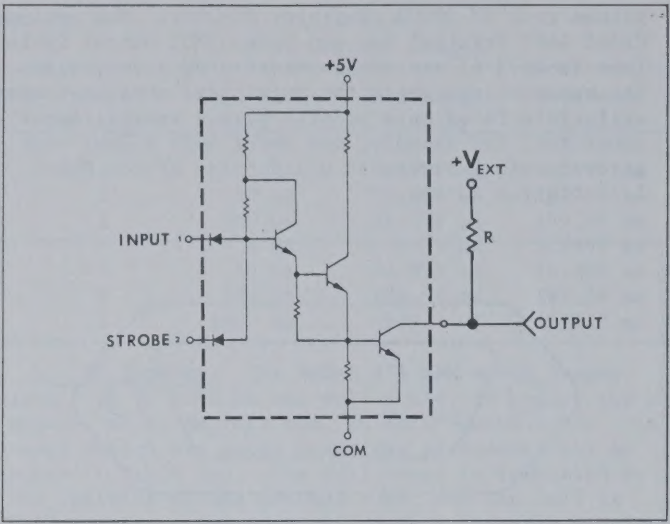

FIGURE 6. Output Buffer Stage.

2. Count Period. During the "COUNT" period, the integrating amplifier is driven to zero by a discharge voltage, with the analog signal removed from the amplifier. The "COUNT INTERVAL" represents the actual count time for the integrating amplifier to reach a zero crossing from the original level of the applied signal. Thus, this interval is proportional to the analog input signal and may be from 0 to 200 milliseconds in duration. For a 100% overrange signal, this interval would then be at its maximum value of 200 milliseconds.

3. Zero Period. During the "ZERO" period, the analog amplifier is zeroed, and the decade counters are reset prior to a new conversion cycle.

f. Timing Outputs and Remote Controls. (Refer to Table 2-7 and Figure 7). The Model 1712 Digital Output provides various timing outputs and remote controls to regulate the transfer of data from the Model 171 DMM to a particular digital acquisition system.

1. Clock. The "Clock" timing output provides 100 kHz pulses which serve as a reference frequency for direct binary outputs when used in conjunction with the "Count Interval" output.

2. Count Interval. The "Count Interval" timing output (see Paragraph 2-9e2) may be used with an external binary ripple counter and gate to obtain a reading directly in binary form.

3. Flag ($\overline{\text{Flag}}$). The "Flag" output is a negative-going logic state "1" that appears for a 300-millisecond interval out of a total conversion time of 500 milliseconds. No change in digital output is made during this interval. The "$\overline{\text{Flag}}$" output is a positive-going logic state "0" and is available for use with digital equipment that will not accept the negative-going "Flag" output.

4. Strobe. The "Strobe" remote control consists of 8 lines to permit word serializing in 4-bit increments or multiples thereof. An open circuit inhibits the controlled output lines from conducting (closure enables conduction). This allows 8, 12, or 16-bit computers to be easily interfaced with the Model 1712 without the need of an intermediate register. Also, these "Strobe" controls allow the user to connect together the data outputs of two or more instruments. Each instrument can then be individually interrogated, without disturbing the other instruments, by simply grounding the strobe lines of the particular instrument of interest. When not using the strobe feature of the 1712, keep all strobe lines closed to common (ground).

5. Hold. The "Hold" remote control, by closure, retains the result of the last A-to-D conversion in both the 1712 output and the display.

6. Hold #2 and Trigger. Closure of the "Hold #2" remote control halts conversions at the end of the present conversion, holding the conversion result in both the 1712 output and the display. The "Trigger" remote control operates only when "Hold #2" is also in use. The release-edge of a pulsed closure initiates one conversion, during which time the signal is averaged for a 200-millisecond period starting 100 milliseconds after the release of either the "Trigger" or "Hold #2". Minimum "Trigger" closure time is one microsecond. The high or open state of the "Trigger" must be + 2 to + 5 volts. Both "Hold #2" and "Trigger" must be left in the open state when not in use. Use Model 1712 output pin number 27 (Common) as ground for all closures.

7. Flag ($\overline{\text{Flag}}$) Reset. The "Flag ($\overline{\text{Flag}}$) Reset" remote control allows for early reset of the Flag ($\overline{\text{Flag}}$) while operating the Model 1712 in any mode. This control can be used whenever the digital readout equipment connected to the 1712 operates faster than the time the Flag ($\overline{\text{Flag}}$) is active (300 milliseconds). For example, activation of the Flag ($\overline{\text{Flag}}$) can tell a computer to take data from the Model 1712 and run a program which may only take 20 milliseconds. At the end of the program, the computer still sees the Flag ($\overline{\text{Flag}}$) and needlessly re-runs the program with duplicate data. By using the "Flag ($\overline{\text{Flag}}$) Reset" control, computer running-time is minimized and data-taking time is not lost.

g. Summary of Digital Outputs and Controls. The basic terminology and some pin-to-function relationships of the outputs and controls of the Model 1712 will now be discussed. Refer to Table 2-7.

1. Digital Output Codes. The digital output code for the Model 1712 is 8-4-2-1 Binary Coded Decimal (BCD). Each digit of a reading is represented at the BCD output by a four-bit binary code. The "units" digit of a reading is represented by the output of pin numbers 1,2,3 and 4. The "tens" digit of a reading is represented by the output of pin numbers 5,6,7, and 8. The "hundreds" digit is represented by the output of pin numbers 9,10,11, and 12. The "thousands" digit is represented by the output of pin numbers 13,14, 15, and 16. The "overrange" digit is represented by the output of pin number 17. Thus, in BCD language, each digit of 4-1/2 digit display of the Model 171 is represented for display by a printer

TABLE 2-7.
Model 1712 Printer/Control Output Pin Identification

J108 Pin No.	Output	Function	J108 Pin No.	Output	Function
1	1×10^0	Data	26	-	-
2	2×10^0	Data	27	Common	GND
3	4×10^0	Data	28	-	-
4	8×10^0	Data	29	Clock	See Para. 2-9f1
5	1×10^1	Data	30	Count Interval	See Para. 2-9e2
6	2×10^1	Data	31	-	-
7	4×10^1	Data	32	$\overline{\text{Flag}}$	See Para. 2-9f3
8	8×10^1	Data	33	Flag	See Para. 2-9f3
9	1×10^2	Data	34	Logic "1"	No Range Available
10	2×10^2	Data	35	Function 1	See Table 2-9
11	4×10^2	Data	36	Function 2	See Table 2-9
12	8×10^2	Data	37	Function 3	See Table 2-9
13	1×10^3	Data	38	Logic "1"	Overload
14	2×10^3	Data	39	Logic "1"	Polarity (+)
15	4×10^3	Data	40	Trigger	Control
16	8×10^3	Data	41	Hold #2	Control
17	1×10^4	Data	42	Logic "1"	AC Reading
18	-	-	43	Strobe Overload	Control
19	DP1 (1.0000)	Decimal Point	44	Strobe Flag	Control
20	DP2 (10.000)	Decimal Point	45	Strobe Function	Control
21	DP3 (100.00)	Decimal Point	46	Strobe Data #4	Control
22	DP4 (1000.0)	Decimal Point	47	Strobe Data #3	Control
23	HOLD	Control	48	Strobe Data #2	Control
24	Flag Reset	Control	49	Strobe Data #1	Control
25	-	-	50	Strobe DP	Control

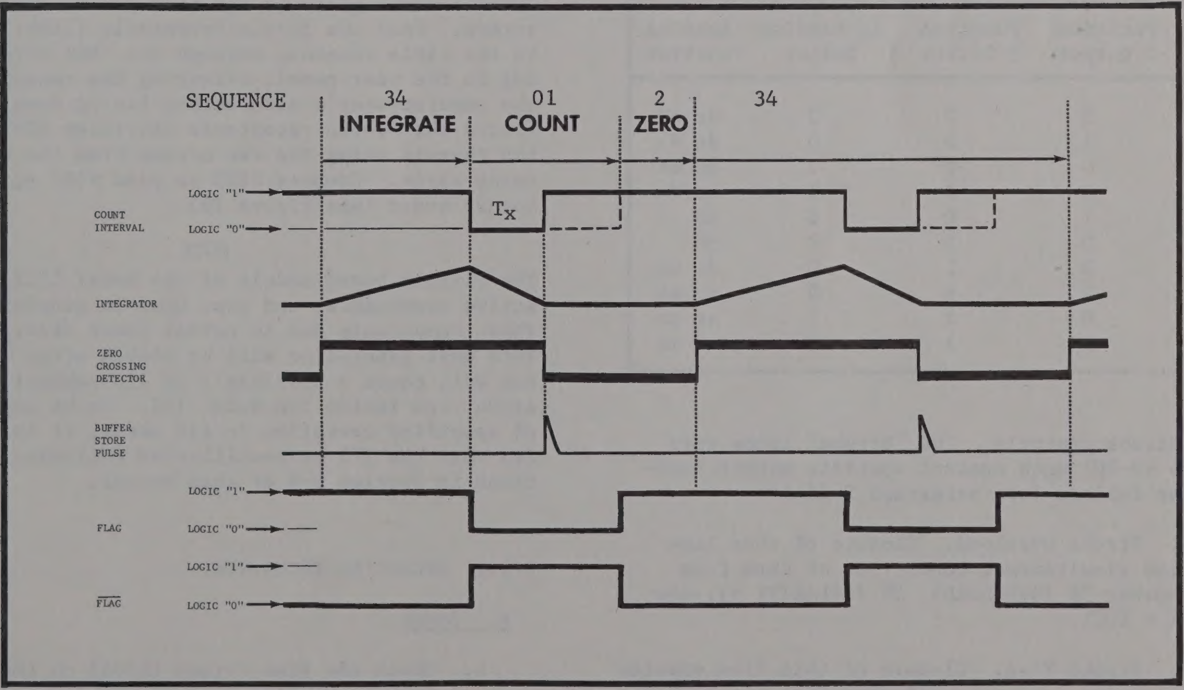

FIGURE 7. Timing Diagram.

or use in a program by a computer. Table 2-8 shows how a decimal number (digit of a reading) is derived from BCD code. The decimal number "7", for example, is derived from the 3rd, 2nd, and 1st bits being in logic state "1" (4 + 2 + 1 = 7).

TABLE 2-8.
BCD Code to Decimal Number Conversion

8×10^n (4th bit)	4×10^n (3rd bit)	2×10^n (2nd bit)	1×10^n (1st bit)	Decimal Number
0	0	0	0	0
0	0	0	1	1
0	0	1	0	2
0	0	1	1	3
0	1	0	0	4
0	1	0	1	5
0	1	1	0	6
0	1	1	1	7
1	0	0	0	8
1	0	0	1	9
n = 0,1,2,3, or 4 depending on digit being decoded				

2. Output Common (Ground). It is recommended that all closures to ground are made through pin number 27 of the output connector of the 1712.

3. Function Indication at Output. The basic function (engineering units) of a reading are represented by a 3-bit binary code from the three output "Function" lines (pin numbers 35,36, and 37). Whether the reading is ac or not is represented by the "AC Reading" output line. Table 2-9 shows how the complete function of a reading is derived from BCD code.

TABLE 2-9.
BCD Code to Function Conversion

Function 1 Output	Function 2 Output	Function 3 Output	AC Reading Output	Reading Function
1	0	0	0	dc mV
0	1	0	0	dc V
1	0	0	1	ac mV
0	1	0	1	ac V
1	1	0	0	kΩ
0	0	1	0	MΩ
1	0	1	0	dc μA
0	1	1	0	dc mA
1	0	1	1	ac μA
0	1	1	1	ac mA

4. Strobe Controls. The "Strobe" lines (pin numbers 43-50) each control specific output functions as follows (see paragraph 2-9f4):

a). Strobe Overload. Closure of this line enables simultaneous conduction of data from pin number 38 (OVERLOAD), 39 (POLARITY +), and 17 (1×10^4).

b). Strobe Flag. Closure of this line enables simultaneous conduction of data from pin number 32 ($\overline{\text{FLAG}}$) and 33 (FLAG).

c). Strobe Function. Closure of this line enables simultaneous conduction of data from pin number 35 (FUNCTION 1), 36 (FUNCTION 2), 37 (FUNCTION 3), and 42 (AC READING).

d). Strobe Data #4. Closure of this line enables simultaneous conduction of data from pin numbers 13, 14, 15, and 16, the four BCD bits representing the "thousands" digit of a reading.

e). Strobe Data #3. Closure of this line enables simultaneous conduction of data from pin numbers 9, 10, 11, and 12, the four BCD bits representing the "hundreds" digit of a reading.

f). Strobe Data #2. Closure of this line enables simultaneous conduction of data from pin numbers 5, 6, 7, and 8, the four BCD bits representing the "tens" digit of a reading.

g). Strobe Data #1. Closure of this line enables simultaneous conduction of data from pin numbers 1, 2, 3, and 4, the four BCD bits representing the "units" digit of a reading.

h). Strobe DP. Closure of this line enables simultaneous conduction of data from pin numbers 19, 20, 21, and 22, representing the four possible decimal-point positions of a reading (see Figure 4a).

h. Installation. To field-install the Model 1712 Digital Output option in the Model 171 Digital Multimeter, first remove the top cover of the 171 by removing the four screws. Insert the PC-275 circuit board module in the mating receptacle (J1202) on the mother board of the Model 171. The receptacle is located near the rear panel. Next, remove the "BCD OUTPUT" cover plate on the rear panel; save the two screws. Feed the 50-pin receptacle (J108), connected to the cable harness, through the "BCD OUTPUT" opening in the rear panel, orienting the receptacle with the manufacturer's part number facing down. Now fasten the 50-pin receptacle (Keithley CS-221) to the chassis using the two screws from the removed cover plate. Connect J708 to pins P708 on the mother board (see Figure 19).

NOTE

The circuit board module of the Model 1712 contains active components, and some heat is generated by these components due to normal power dissipation. This heat generation will be stable after warm-up but will cause a possible 1 to 2°C ambient temperature rise inside the Model 171. To be assured of specified operation in all modes, it is recommended that the 171 be recalibrated following instructions in Section 5-4 of this manual.

2-10. OPERATING TECHNIQUE.

a. Power.

1. Check the line switch (S701) on the rear panel for proper line voltage setting, either 117 or 234V.

2. Check the fuse (F701) for proper current rating:

117V: 1/2 A SLO-BLO, 3AG, Keithley FU-4
234V: 1/4 A SLO-BLO, 3AG, Keithley FU-38

3. Connect the line cord of the 171 to a three-terminal type, grounded, line-voltage outlet. The chassis of the instrument will now be connected to line ground. If the line outlet is not a three-terminal type, use the line plug adapter supplied with the Model 171. Use the ground pin wire of the line plug adapter to connect the instrument chassis to a good earth ground.

4. Set POWER switch (S702) to ON.

b. System Connections.

1. Connect the source between input high and low using cables such as the optional Keithley 18762B which is terminated by a banana plug and an alligator clip. Use shielded cable as noted in paragraphs 2-16.

2. Connect the analog output to a recording or monitoring device using the optional accessory cable. Model 3701 which is terminated by a mating analog output connector and a dual banana plug. The Model 3701 is designed for easy connection to an analog recorder such as the Keithley Model 370.

3. Connect the optional digital output Model 1712 as described in paragraph 2-9. The Keithley accessory Model 4405 Terminal Box can be used to make quick connections between the 1712 output and most digital devices.

4. Refer to paragraphs 2-1c,d for a discussion of floating and source impedance considerations.

5. Refer to paragraphs 2-1a,b for a discussion of noise considerations and shielding.

c. Measurement Procedure Summary.

1. Select the desired measurement mode by depressing one of the front panel pushbuttons (S903-907).

2. Adjust the Range switch (S902) to obtain the largest readout possible without causing a blanked overrange condition.

3. Determine the magnitude of the measured parameter by recording the digits, decimal point, and "units" designation. Note that, for example, a reading of +12.638 mV could also be interpreted as $+1.2638 \times 10^{-4}$ volts in floating-point terminology.

4. Since environmental changes may occur, (see paragraph 2-1a1) such as ambient temperature variations, it may be necessary to adjust the zero reading at various intervals in the measurement. To adjust the zero, short out the input terminals using a copper shunt (low thermal), and adjust the rear panel zero control (R723) for a zero reading on the desired range.

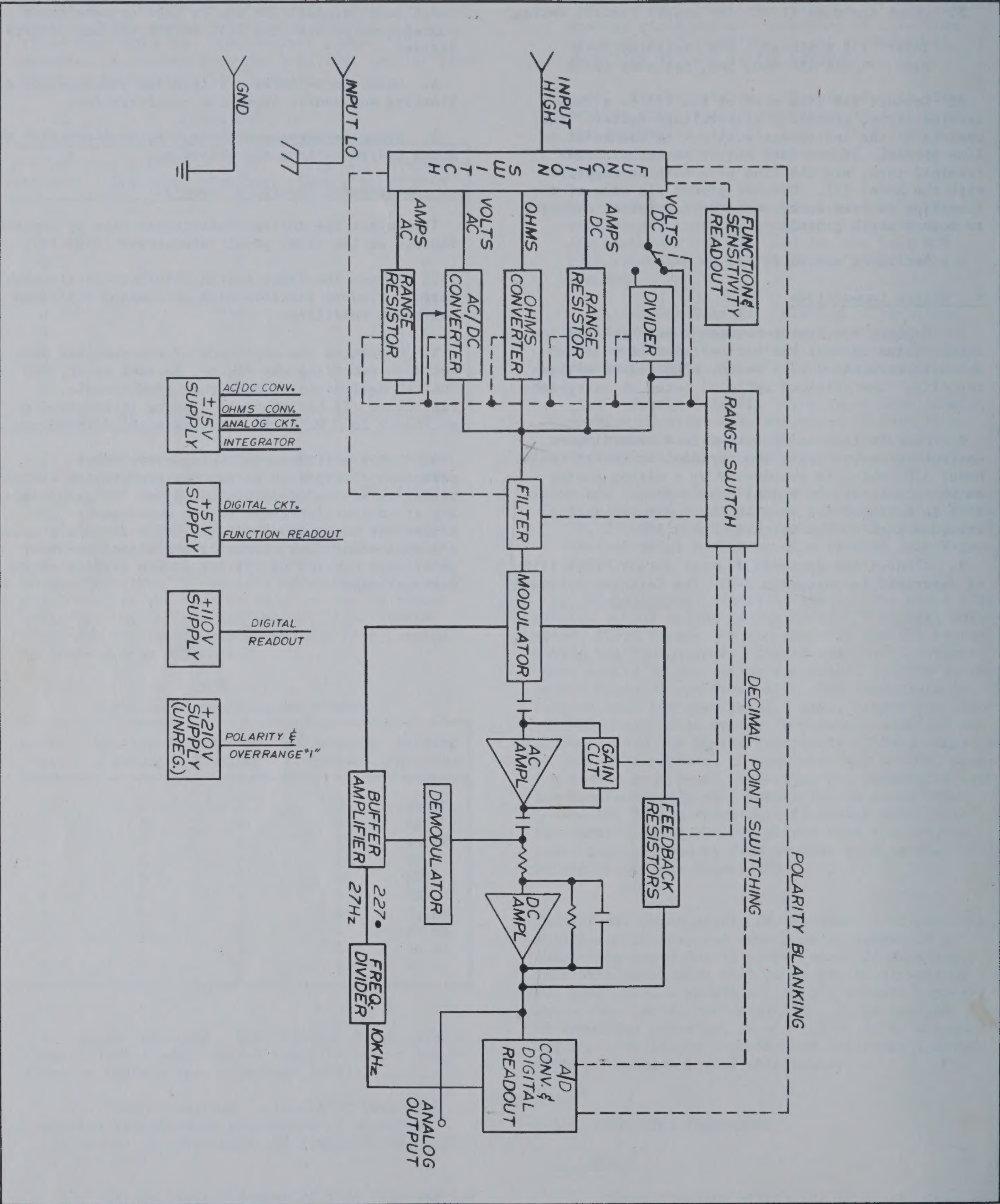

FIGURE 8. Overall Block Diagram.

SECTION 3. CIRCUIT DESCRIPTION

3-1. GENERAL. The circuitry can be analyzed as two sections: an analog amplifier and an analog-to-digital converter/display.

a. The analog section is basically a high gain chopper amplifier. The circuitry includes an ac/dc converter and an ohms converter to provide multimeter versatility.

b. The a/d converter is a dual-slope integrating type converter with two readings per second maximum conversion rate. Full BCD outputs and external controls are provided when the optional Model 1712 Digital Output is installed.

3-2. ANALOG AMPLIFIER. This circuit is composed of an input filter network, a modulator, an ac amplifier, a demodulator, and a final stage dc amplifier. Overall gain of the analog amplifier is set by resistors R520, R522, R523, R524, R525, R540 on the 10 mV and 100 mV ranges. For all other ranges, the analog amplifier is set for unity gain. See Figure 9 and Table 3-1.

TABLE 3-1.
Gain of Analog Amplifier

Range	R_1	R_{F1}	Gain	Output
10 mV	300Ω	29,700Ω	100	1 V
100 mV	300Ω	2,700Ω	10	1 V
1 V	--	0Ω	1	1 V
10 V	--	0Ω	1	1 V
100 V	--	0Ω	1	1 V
1000 V	--	0Ω	1	1 V

a. Input Filter. Resistors R721, and R722 and capacitors C718, C719, C905, C906 provide up to 80 dB filtering at line frequencies.

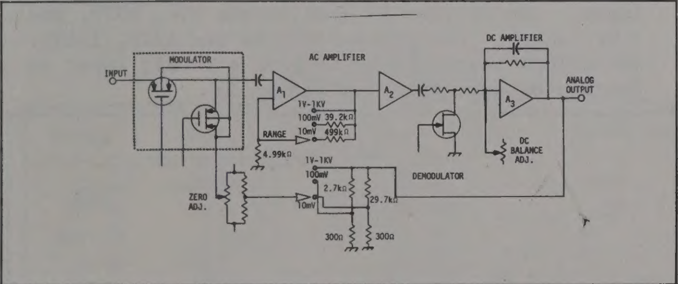

FIGURE 9. Analog Amplifier.

b. Modulator. Transistors Q501 and Q502 are series/shunt switches which modulate the input signal at a 227.27 Hz rate. Potentiometer R506 permits internal adjustment of current offset. Potentiometer R723 permits adjustment of the voltage offset (rear panel ZERO control). Diodes D501 and D502 are protection diodes to limit the voltage applied to the demodulator.

c. AC Amplifier. Transistors Q503, Q504 form a differential amplifier with high input impedance. Integrated circuit QA501 and Q503, Q504 are connected as a variable-gain differential amplifier. Three gain settings are used for the 10 mV, 100 mV, 1V and higher ranges. The open-loop gain of the analog amplifier is varied so as to maintain a constant gain-bandwidth product. The gain of the first stage is $R_{F2} + R_2)/R_2$ as shown in Table 3-2. See Figure 9.

TABLE 3-2.
Gain of First Stage AC Amplifier

Range	R_2	R_{F2}	Gain
10 mV	4.99kΩ	499 kΩ	101
100 mV	4.99kΩ	39.2kΩ	8.8
1 V	4.99kΩ	0	1
10 V	4.99kΩ	0	1
100 V	4.99kΩ	0	1
1000 V	4.99kΩ	0	1

The second stage ac amplifier is composed of integrated circuit QA502 and resistors R538, R509, and R513. The gain is determined by (R538 + R509)/R509 = 101(see schematic #25529D).

d. Demodulator. Transistor Q505 acts as a shunt switch driven at 227.27 Hz rate.

e. DC Amplifier. Integrated circuit QA503 is connected as a high-gain inverting amplifier. The dc gain is set by resistors R508 and R511 where G = R508/R511 = 10^4. Potentiometer R526 is an internal offset adjust. Capacitor C507 provides filtering of the chopper frequency noise. See Figure 9.

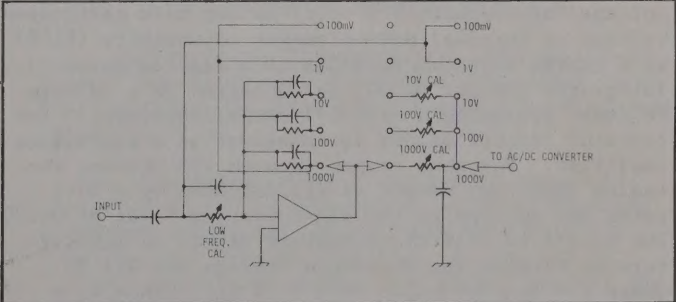

FIGURE 10. Active AC Divider.

f. AC Voltage Divider. This circuit provides the proper divider ratio for ac input voltages between 10V and 1000V. The nominal output of integrated

circuit QA601 is 1V for all full-scale inputs. The division ratios and feedback values are given in Table 3-3. The gain is adjusted by means of potentiometer R606 at the input to QA601. Following amplifier QA601 is an RC network used for frequency compensation at higher frequencies. See Figure 10.

TABLE 3-3.
AC Voltage Divider Ratios

Input Volts ac rms	Input R	Feedback R	Feedback C	Output ac rms
100 mV	1 MΩ	--	--	100 mV
1 V	1 MΩ	--	--	1 V
10 V	1 MΩ	100 kΩ	2 pF	1 V
100 V	1 MΩ	10 kΩ	5 pF	1 V
1000 V	1 MΩ	1 kΩ	3300 pF	1 V

g. AC/DC Converter. This circuit provides the conversion of ac rms to mean-value dc for ac voltage and current. The signal is applied to the gate of FET Q1101 which is connected as a source follower. The signal is then converted by means of amplifier QA1101 which is connected as a non-inverting amplifier. See Figure 11.

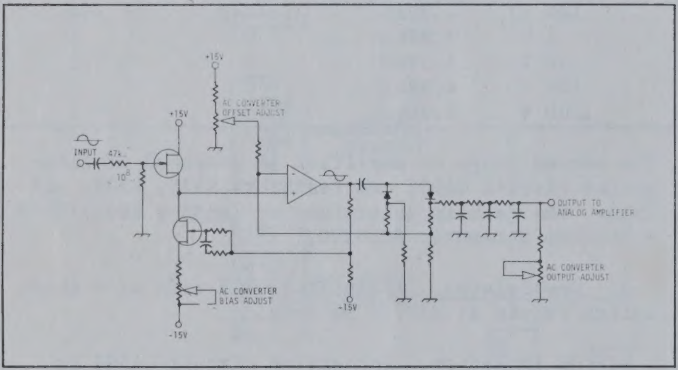

FIGURE 11. AC/DC Converter.

h. Ohms Converter. This circuit provides a reference voltage for the ohms measurement. The voltage is zener regulated at diode D1001. The reference voltage (approximately 1 volt) is set to a calibrated voltage by internal potentiometer adjustments (R1003 is a coarse adjustment; R1004 is a fine adjustment). Integrated circuit QA1001 is connected as a voltage follower providing a very low output impedance. Integrated circuit QA1002 is connected as a difference amplifier. For ohms ranges through 100 kilohm, the analog amplifier output is divided down by a 20:1 ratio and applied to the non-inverting input of QA1002. The result is that the output of QA1002 is the difference between the reference voltage and 0.1 V_o where $V = 0.1 V_o - (-1) = 1 + .1 V_o$. Since $V_o = 10 V_{in}$, the output of QA1002 is always $1 + V_{in}$, where V_{in} is the drop across the unknown resistor. The voltage is applied to the reference resistor (R905 through R912) to provide a constant current to the input terminals. On the 1 megohm to 1000 megohm ranges, the analysis is the same except that the input drop is 1 volt instead of 0.1 volt. Diodes D1003 and D1002 are protection diodes to prevent overloading of the ohms reference circuit in the event of a high voltage present at the input terminals of the Model 171. See Figure 12.

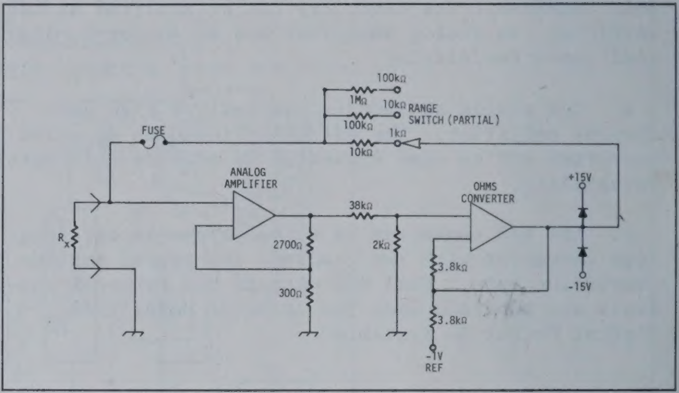

FIGURE 12. Ohmmeter Configuration.

i. Frequency Divider. This circuit provides the 227.27 Hz chopping frequency. Integrated circuit QA506 divides down (÷11) the 10kHz signal (which has been derived from the 100kHz clock signal). Integrated circuit QA507 (A,B) is a dual flip-flop which provides an additional frequency division by a factor of 4.

j. Buffer Amplifier. This circuit provides drive signals for the switching transistors in the modulator and demodulator circuits. Transistors Q508 and Q507 provide anti-phase square waves which drive the gates of the switching FETs Q501 and Q502. Transistor Q506 provides a drive signal for Transistor Switch Q505. Potentiometer R535 is an internal adjustment for calibration of the chopper drive signal.

3-3. SWITCHING.

a. Function Selection. The five front panel pushbuttons are used to select either DCV, ACV, OHMS, DCA, or ACA.

1. DCV. When this mode is selected the input HI is connected thru a divider to the analog amplifier input. The divider is used on the 10V, 100V, and 1 kV ranges. The divider ratios are 1/10, 1/100, and 1/1000 respectively to give a 1 volt input to the analog amplifier. See Figure 13.

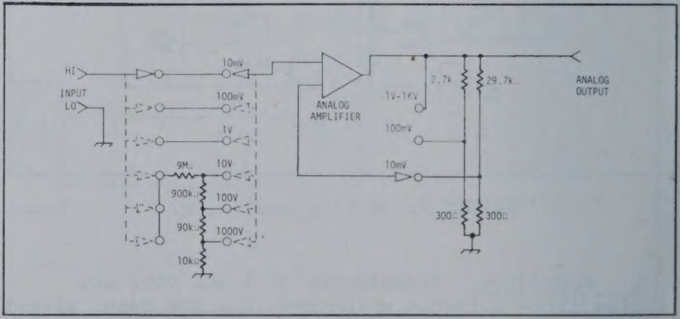

FIGURE 13. Voltmeter Configuration.

2. ACV. When this mode is selected the input HI is connected to the ac voltage divider and ac/dc converter.

3. OHMS. When this mode is selected the input HI is connected directly to the analog amplifier input. The input HI is also connected to the ohms converter circuit. On the 1 kΩ and 10 kΩ ranges a protection diode network (D905-D908) prevents overheating of the range resistors in the event of an accidental voltage applied to the input. Table 3-4 shows the impressed voltage and resistance.

TABLE 3-4.
Ohms Converter

Range	Sensitivity	V_{open}	R_{REF}	I_{REF}	Calibration Adjustment
1 kΩ	100 mV	2 V	10 kΩ	100 µA	--
10 kΩ	100 mV	2 V	100 kΩ	10 µA	--
100 kΩ	100 mV	2 V	1 MΩ	1 µA	R1003,04
1 MΩ	1 V	12 V	1 MΩ	1 µA	--
10 MΩ	1 V	12 V	10 MΩ	100 nA	--
100 MΩ	1 V	12 V	100 MΩ	10 nA	--
1000 MΩ	1 V	12 V	100 MΩ	1 nA	R1007

4. DCA. When this mode is selected the input HI is connected to the analog amplifier and shunted to LO through range resistors as shown in Table 3-5. See Figure 14.

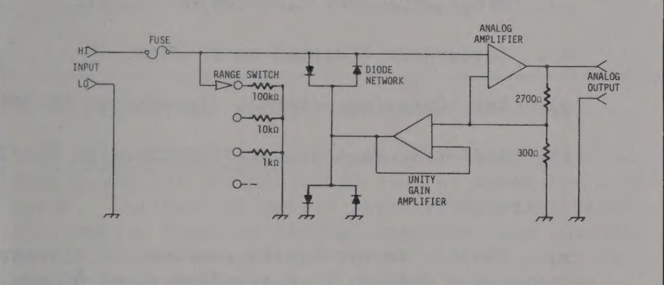

FIGURE 14. Ammeter Configuration.

A protection diode network (D901-D904) prevents overheating of the range resistors in the event of an overload current. Fuse F901 limits the input current to 3 amperes in case of a severe overload.

TABLE 3-5.
Current Ranges

Range	Shunt R	Volt Sensitivity	Adjustment
1 µA	100 kΩ	100 mV	-
10 µA	10 kΩ	100 mV	-
100 µA	1 kΩ	100 mV	-
1 mA	100 Ω	100 mV	-
10 mA	10 Ω	100 mV	-
100 mA	1 Ω	100 mV	R917
1000 mA	0.1 Ω	100 mV	R914

5. ACA. When this mode is selected the input HI is connected to the ac divider and ac/dc converter circuits. The input HI is also shunted to LO through range resistors as shown in Table 3-5. A protection diode network (D901-D904) prevents overheating of the range resistors in the event of an overload current. Fuse F901 limits the input current to 3 amperes in case of a severe overload.

3-4. DRIVEN GUARD AMPLIFIERS.

The driven guard is effectively at the non-inverting input potential of the analog amplifier.

a. Chopper Signal Reference. Integrated circuit QA505 is connected as a unity-gain or voltage-follower amplifier. The gate drive for FET's Q501 and Q502 are referenced to the feedback or guard potential.

b. Offset Adjust Reference. Integrated circuit QA504 is connected as a voltage follower amplifier with an offset adjustment (potentiometer R527). The output of QA504 is used to provide a driven guard for the offset adjustment network and the overload protection diode networks.

3-5. PROTECTION CIRCUITS.

a. Ohms Protection. Diode network D905-D908 serves as an overload protection on the 1 kΩ and 10 kΩ ranges.

b. Current Protection. Diode network D901-D904 serves as an overload protection on all current ranges.

3-6. FUNCTION AND RANGE.

a. Range Indication. The decimal point drivers Q703-Q706 are operated by +5 volts which is applied through the range switch.

b. Function Indication. The eight function indicators are operated by grounding the appropriate indicator lamp through the range and function switch. Table 3-6 shows the relationship of function and range indication.

3-7. DIGITAL SECTION.

a. General. The digital section includes the analog-to-digital converter, digital display, and digital output option as shown in Figure 16.

b. Analog-to-Digital Converter. The analog-to-digital converter uses a modified dual-slope integration technique which has inherent line-frequency noise rejection.

1. Conversion Cycle. The analog signal is applied to the Integrator for a 200 millisecond "INTEGRATE" period, which is an even multiple of the line frequency period. At the end of this interval and during the "COUNT" period, the analog signal is removed and the integrator voltage is driven to zero. The time interval to reach a "Zero Crossing" is counted to complete the analog-to-digital conversion. The "COUNT" period is 200 milliseconds for an end-scale input, as shown in Timing Diagram Figure 7.

TABLE 3-6.
Function & Range Display

Range Position	Function Displayed					Decimal
	DCV	ACV	OHMS	DCA	ACA	
1	NO RANGE	NO RANGE	1 kΩ	1 μA	1 μA AC	X.XXXX
2	10 mV	NO RANGE	10 kΩ	10 μA	10 μA AC	XX.XXX
3	100 mV	100 mV AC	100 kΩ	100 μA	100 μA AC	XXX.XX
4	1 V	1 V AC	1 MΩ	1 mA	1 mA AC	X.XXXX
5	10 V	10 V AC	10 MΩ	10 mA	10 mA AC	XX.XXX
6	100 V	100 V AC	100 MΩ	100 mA	100 mA AC	XXX.XX
7	1000 V	1000 V AC	1000 MΩ	1000 mA	1000 mA AC	XXXX.X
(Clockwise Rotation)						

The Integrator is zeroed for a minimum of 100 milliseconds ("ZERO" period) before the sampling is repeated. The total conversion time is 500 milliseconds, which corresponds to 2 conversions per second.

2. Timing Sequence. The operation of the A-to-D Converter can be described by considering a typical conversion cycle.

a). The clock provides pulses at rate of 100 kHz for 50 to 60 Hz operation.

b). The BCD Counter serves as a master timing control for the A-to-D Conversion cycle. The timing is accomplished by the "10000" counter which has five coded states, namely 0,1,2,3, and 4, each lasting for 10,000 counts of the 100 kHz clock.

c). The Program Decoder controls the sequence of commands based on the coded states from the BCD Counter. The "2" command or a zero crossing initiates the "ZERO" period which removes any residual charge on the integrating capacitor. The "3,4" command initiates the "INTEGRATE" period. At the end of the "INTEGRATE" period, the "0,1" command initiates the "COUNT" period.

d). When the "0,1" command is given, the analog signal is removed and the integrator is driven to zero by a reference current source. The Zero-Crossing Detector senses a zero-crossing of the Integrator output and removes the current source. A "Buffer/Store" pulse (pp) is generated to control the Buffer Storage Registers (QA209, QA212, QA215, QA218).

e). When the "Buffer/Store" command is given, the Buffer/Storage Register copies the BCD information from the BCD Counter (QA208, QA211, QA214, QA217).

f). The conversion cycle is completed after the "2" period (i.e., the Zeroing Period).

3. The A-to-D converter is composed of six major circuits as follows: (See Figure 16 for a block diagram.)

a). Clock (located on PC-300).

b). BCD Counter (located on PC-299).

c). Program/Decoder (located on PC-299).

d). Integrator (located on PC-301).

e). Zero-Crossing Detector (located on PC-301).

f). Buffer/Storage Register (located on PC-299).

4. Circuitry.

a). Clock. An oscillator composed of integrated circuits QA401A, B, C provides clock pulses at a rate of 100 kHz. A crystal oscillator Y401 determines the frequency of operation.

b). BCD Counter. The Decade Counters designated "1", "10", "100", and "1000" are composed of individual integrated circuit modules QA217, QA214, QA211, and QA208 respectively. All four counters have a capacity of 10-counts each. For counts of 10,000 and higher, the overrange "1" (DS201) is lit. This is accomplished by Q201 and QA202A.

c). Program/Decoder. This circuit produces event commands to control the overall sequence for the conversion cycle. The Program/Decoder consists of a 5-state counter (QA207), logic circuits QA204D, QA203D, QA205D, E, and F, and inverter QA206A. The event commands are defined as "0,1", "2", "3,4".

d). Integrator. The operation of the Integrator is controlled by switches identified as S_A, S_D, S_X, and S_R as shown in Figure 15. Switch S_X (Sampling Switch) is composed of Q302. Switch S_D (Zeroing Switch) is composed of transistors Q305 and Q315. Transistors Q306, Q307 are control

circuits controling Q305 and Q315. The integrator amplifier consists of QA301 and Q313. This is followed by a gain of 20 and gain of 50 (QA302 and QA303). The integrator capacitor is C312 (.1 µfd). Switches Q308 and Q310 control the reference current during the "0,1" period. The feedback rezeroing of the Integrator circuit is performed by FET Q315 (Switch S_D). Resistor R351 and capacitor C317 provide filtering in the feedback loop. Diodes D312 and D313 provide fast response for large input offsets (especially due to input overloads).

e). Zero-Crossing Detector. The level detector is QA304. Its output provides two levels which selects the proper reference for the "0,1" period and also produces a zero crossing pulse (p).

f). Buffer/Storage Register. The "1", "10", "100", and "1000" storage registers are composed of individual integrated circuits QA218, QA215, QA212, and QA209 respectively. The "10000" storage is done by QA202A.

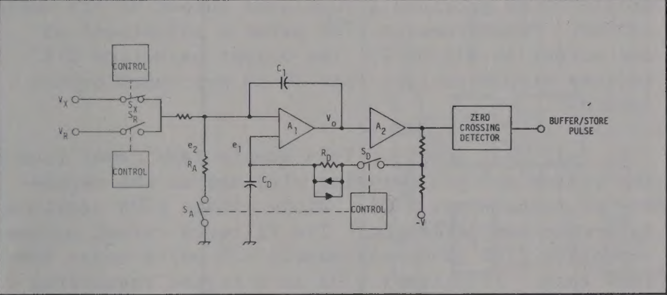

FIGURE 15. Analog-to-Digital Converter.

c. Digital Display. The display is composed of four numerical readout tubes plus an overrange indicator. The Decoder/Driver circuits decode the BCD information from the Storage Register into ten-line decimal code. A separate driver circuit controls the "Overrange 1" whenever the full range exceeds 9-9-9-9.

1. Numerical Readouts. The four numerical readouts V204, V203, V202, and V201 are driven by Decoder/Driver modules QA219, QA216, QA213, and QA210 respectively. Blanking of the numerical readouts occurs whenever the display exceeds 1-9-9-9-9. The Blanking circuit is composed of transistors Q204, Q205, and Q206. Transistor Q205 drives the base of Q204 to provide +170 volts for the readout tubes during normal operation. When an overload occurs, transistor Q206 is driven "ON" which in turn reduces the +170 volt output, thus blanking the readout tubes.

2. Polarity Indication. This circuit is composed of integrated circuit QA205A, transistors Q202 and Q203, and polarity indicator module DS202. Integrated circuit QA202B is the Polarity Storage Register.

3. Overrange Indication. This circuit is composed of integrated circuits QA201A and QA202A, transistor Q201, and indicator DS201. QA202A is the Overload Storage Register.

d. Digital Output Option. The digital output includes output buffers for all output information. The buffers utilize "Open Collector" output transistors as shown in Figure 6. The buffer stages have provision for optional "STROBE" control as shown in Figure 16.

1. Buffer stage. Each buffer is composed of a Motorola type MC858P NAND Gate (four gates per circuit module). The "NAND" logic for this type of circuit is shown in Table 5-11.

TABLE 5-11.
Positive "NAND" Logic

Input 1	Input 2	Output
Low	Low	High
Low	High	High
High	Low	High
High	High	Low

2. "STROBE" Circuit. A typical "STROBE" circuit consists of an inverter state (Keithley IC-32), a 10 kilohm pull-up resistor (Keithley R76-10), and a blocking diode (Keithley RF-39). The strobe enables the "NAND" gate so that the buffered outputs can be monitored.

3. "HOLD" Circuit. This circuit inhibits the "pp" pulse when the HOLD is grounded. Inverters QA 102 A,B are buffer stages. Diode D102 is a protection diode to block voltages higher than +5V.

4. "FLAG" Circuit. The "$\overline{0,1}$" output from QA205D is inverted to "0,1" by QA103B and goes three places. First, it is differentiated by C102 and R105. This pulse is then inverted by QA103C and sent to QA101B in order to set the output of QA101B in the "HI" state. This "HI" level is sent to QA105D, whose output is the "FLAG" which is now in the "LO" state. Secondly, the inverted "$\overline{0,1}$" goes to the input of QA101A and is sent through to the output by a clock pulse, which is 5 microseconds later than the original "$\overline{0,1}$" time. The positive-going edge of the delayed "0,1" sends the "NO RANGE" information, which is inverted by QA108B, to the output of QA101B and sends a "LO" state ("0") to the inverted output of QA101B. This inverted output goes to QA105D, is inverted again, and is now the "FLAG" output when QA106B is strobed. The "HI" state ("1") of QA101B is sent to QA105C and inverted to give the "$\overline{\text{FLAG}}$" output when QA106B is strobed. Thirdly, the inverted "$\overline{0,1}$" goes to QA105A along with the "STORE" pulse from QA204A. These inputs generate the "COUNT INTERVAL" through QA105A.

5. "COUNT INTERVAL". The "COUNT" period is logic "0" when both inputs are high. See Paragraph 3-7d4.

6. "POLARITY" Circuit. Integrated circuit QA104B is the polarity buffer. The polarity output buffer conducts when the "OVERLOAD" strobe is grounded.

7. "OVERLOAD" Circuit. Integrated circuit QA104A is the overload buffer stage which conducts when the "OVERLOAD" strobe is grounded.

8. "TRIGGER" Circuit. A "TRIGGER" pulse (see Paragraph 2-9f6) resets the five-stage counter and starts a conversion.

9. "FUNCTION" Circuit. The "FUNCTION" outputs are logic "1" for corresponding inputs as shown in Table 2-9 on Page 10. The function buffer conducts when the "FUNCTION" strobe is grounded.

10. "DECIMAL POINT" Circuit. This circuit consists of four output buffer stages corresponding to decimal positions DP-1, DP-2, DP-3, and DP-4. Integrated circuits QA111 A,B,C, and D are "NAND" gates which will conduct when the "DECIMAL POINT" strobe is grounded. Inverters QA110 B,C,D, and E are used to invert the decimal point logic from the range circuitry.

11. "DATA" Buffer Circuits. The data output buffers consist of integrated circuits QA112 (A, B,C,D), QA113 (A,B,C,D), QA114 (A,B,C,D), and QA115 (A,B,C,D). Each set of BCD data can be monitored separately or in parallel by grounding the respective strobe designated Data #1, Data #2, Data #3, or Data #4.

12. "OVERRANGE 1" Circuit. Integrated circuit QA104C is a "NAND" gate which conducts when the "OVERLOAD" strobe is grounded.

13. "HOLD #2" Circuit. This input is biased "high" through resistor R118. Diode D107 is a protection diode used to block voltages higher than +5V.

14. "FLAG RESET" Circuit. Integrated circuit QA103-D is a "NOR" gate which does not conduct (turns "off") when the "FLAG RESET" is grounded to common (lo). Integrated circuit QA103-C will then conduct (turns "on"), causing flip-flop QA101B to be reset. The "FLAG RESET" must be released from ground to re-enable the "FLAG" circuit.

3-8. POWER SUPPLY. The instrument power is provided by 105-125V or 210-250V rms at 50 or 60 Hz. The line switch (S701) connects the primary windings of transformer T701 in parallel (117V) or series (234V). The power switch (S702) disconnects both sides of the line input when in OFF position. A single fuse (F701) is used to protect line power to the instrument.

a. <u>+5 Volt Supply</u>. This supply taps power from a center-tapped winding on the secondary of transformer T701 (Green, White, Green/White). Diodes D701 and D702 form a full-wave rectifier. The filtered output across capacitor C701 is approximately +8 volts under nominal load. Integrated circuit QA701 is a regulator module which provides an output of +5 volts ±250 mV. The output capacitor C707 reduces ripple to less than 30 mV p-p under nominal loading.

b. <u>+15 Volt Supply</u>. This supply taps power from the red and red/white windings on the secondary of transformer T701. Diode bridge D704 provides full-wave rectification. The filtered output across capacitor C703 is approximately +20 volts under nominal load. Transistor Q701 is a series regulating device. Resistor R703 provides current sensing to automatically limit the current to approximately 200 mA. Integrated circuit QA702 is a regulator module which provides a regulated output of +15 volts ±10 mV. Potentiometer R708 permits adjustment of the output to +15.00 V. The output capacitor C712 reduces ripple to less than 10 mV p-p under normal loading.

c. <u>-15 Volt Supply</u>. This supply taps power from the yellow and yellow/white windings on the secondary of transformer T701. Diode bridge D706 provides full-wave rectification. The filtered output across capacitor C705 is approximately -20 volts under nominal load. Transistor Q702 is a series regulating device. Resistor R705 provides current sensing to automatically limit the current to approximately 200 mA. Integrated circuit QA703 is a regulator module which provides a regulated output of -15 volts ±10 mV. Potentiometer R711 permits adjustment of the output to -15.00 V. The output capacitor C713 reduces ripple to less than 10 mV p-p under normal loading.

d. <u>+210 Volt Supply</u>. This supply taps power from the Blue and White windings on the secondary of transformer T701. Diode D707 provides half-wave rectification. Resistor R701 provides current limiting. The output across capacitor C706 is approximately +200 to +240 volts with 6 volts p-p ripple under nominal loading.

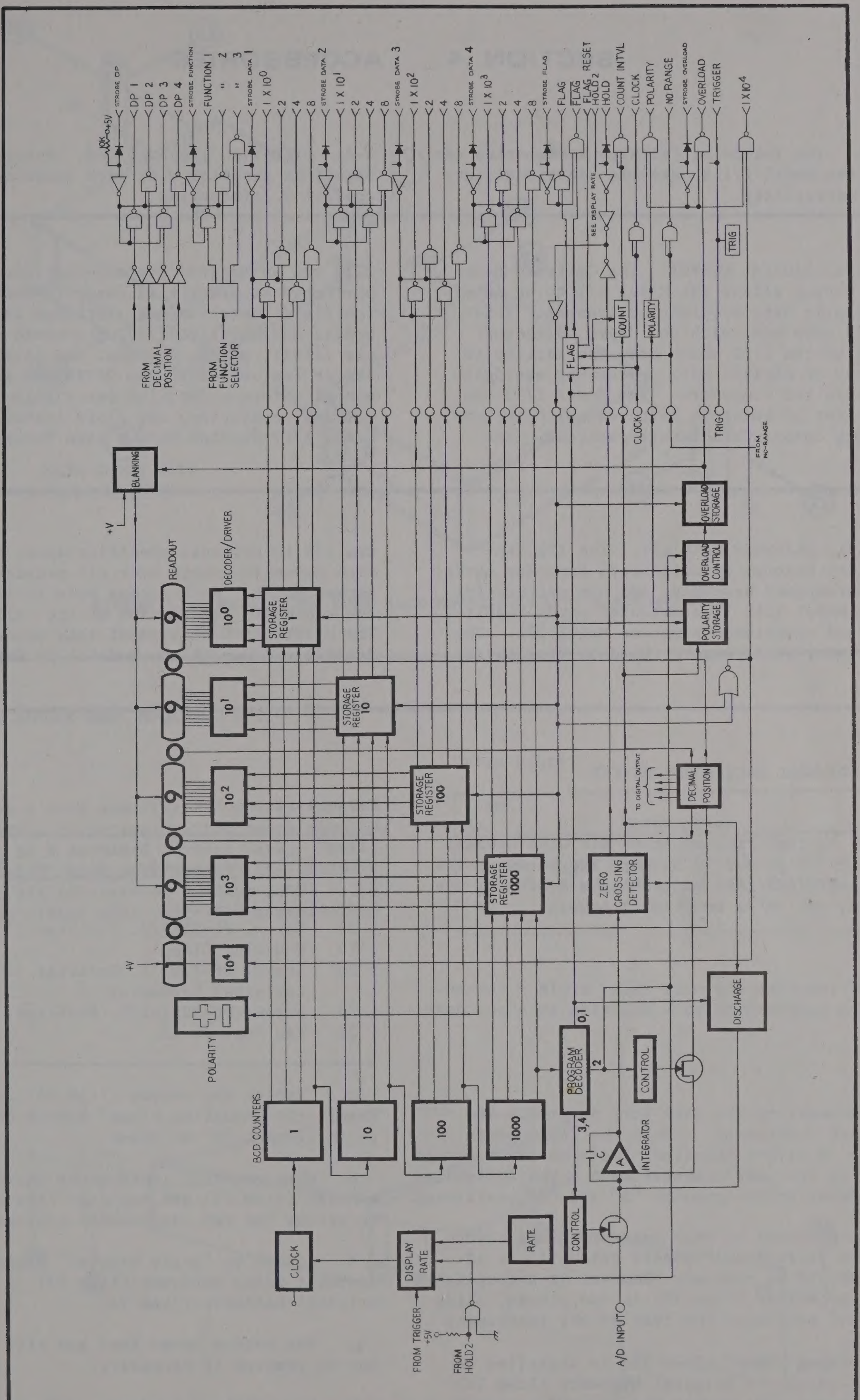

FIGURE 16. A-to-D Converter Block Diagram.

SECTION 4. ACCESSORIES

4-1. GENERAL. The following Keithley accessories can be used with the Model 171 to provide additional convenience and versatility.

4-2. OPERATING INSTRUCTIONS. A separate Instruction Manual is supplied with each accessory giving complete operating information.

4-3. MODEL 1712 DIGITAL OUTPUT. The Optional Model 1712 Digital Output allows the Model 171 to be interfaced to automatic data acquisition systems. This interfacing is made easy with the "open collector" buffer stages of the 1712 which have the ability to drive a variety of digital data processing equipment such as printers and computers. The Model 1712 has an extensive list of built-in features which include complete timing outputs and remote controls. The 1712 can be ordered factory-installed in the 171, or purchased separately in ready-to-install kit form for field installation. Included is an output buffer module assembly (PC-275), pre-wired 50-pin receptacle (J108), wiring harness, and mating 50-pin connector (not wired). The OPERATION section of this manual offers a detailed description of the specifications, operation, and field installation of the Model 1712 Digital Output (see Paragraph 2-9.)

4-4. MODEL 1713 EXTENDER CARD KIT. The 1713 Kit consists of five printed circuit board extender cards, one card guide/support assembly, and one calibration cover for the Model 171. The extender cards facilitate testing and troubleshooting the Model 171. The calibration cover, which must be used to recalibrate the 171 to original specifications, is specially made with moveable covers over all required calibration access holes. Each access hole is identified with the schematic designation of the calibration control. The MAINTENANCE section of this manual describes the details and use of the Model 1713 Extender Card Kit.

4-5. MODEL 1007 DUAL RACK MOUNTING KIT.

Description:

The Model 1007 is dual rack mounting kit with overall dimensions 3-1/2" high and 19" wide. The hardware included in this kit consists of two Angle Brackets, one Mounting Clamp, and extra mounting screws.

Application:

The Model 1007 converts any half-rack, style M instrument from bench mounting to rack mounting in a standard 19-inch rack.

Installation:

a. Before assembling the rack kit, determine the position of each instrument. Since the instruments can be mounted in either location, their position should be determined by the user's measurement. The following instructions refer to instruments "A" and "B" positioned as shown.

b. Once the position of each instrument has been determined, the "side dress" panels (Item 11) on adjacent sides should be removed. Removal is accomplished by loosening the screws (Item 24) in two places. Slide the "side dress" panels to the rear of the instrument to remove.

c. The "mounting clamp" (Item 23) is installed on instrument "A" using the original hardware (Item 24). With the screws removed, insert the "mounting clamp" behind the "corner bracket" (Item 7) and replace the screws to hold the mounting clamp in place.

Parts List:

Item No.	Description	Qty Req'd	Keithley Part No.
21	Angle Bracket	2	24783A
22	Screw, #6-32x5/8, Phillips	4	-
23	Mounting Clamp	1	24798B
24	Screw, #6-32x1/2, Phillips (original hardware)	4	-
25	Screw, #6-32x1x1/8, Phillips	1	-
26	Kep Nut, #6-32	1	-

d. Tighten the screws (Item 24) on instrument "B". Insert the "mounting clamp" behind the "corner bracket" on instrument "B" as shown.

e. When mounting instruments having the same depth, a screw (Item 25) and kep nut (Item 26) are required to secure the two instruments together.

f. Attach an "angle bracket" (Item 21) on each instrument using hardware (Item 22) in place of the original hardware (Item 24).

g. The bottom cover feet and tilt bail assemblies may be removed if necessary.

h. The original hardware, side dress panels, feet and tilt bail assemblies should be retained for future conversion back to bench mounting.

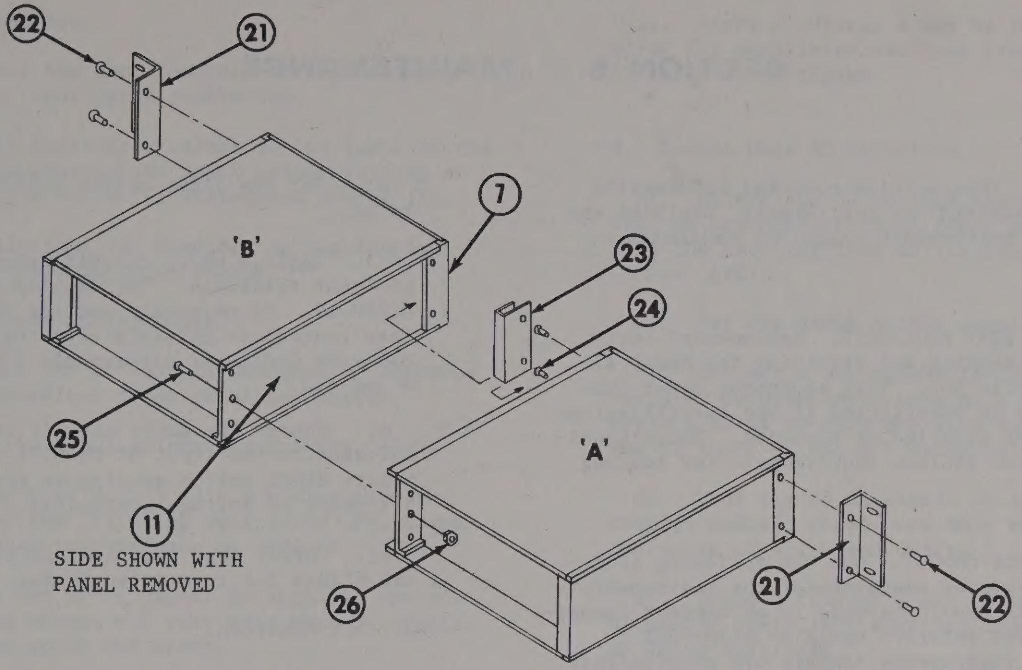

FIGURE 17. Model 1007 Dual Rack Mounting Kit - Exploded View.

4-6. MODEL 2000 SINGLE RACK MOUNTING KIT.

Description:

The Model 2000 is a rack mounting kit which converts any half-rack, Style M instrument from bench mounting to rack mounting in a standard 19-inch rack. The dimensions are 3-1/2" high x 19" wide. The hardware included in this kit consists of a blank panel which can be mounted on either side of a half-rack instrument.

Parts List:

Item No.	Description	Qty Req'd	Keithley Part No.
21	Angle Bracket	1	24783A
22	Screws, #6-32 x 5/8, Phillips	4	-
27	Staked Panel	1	25004B

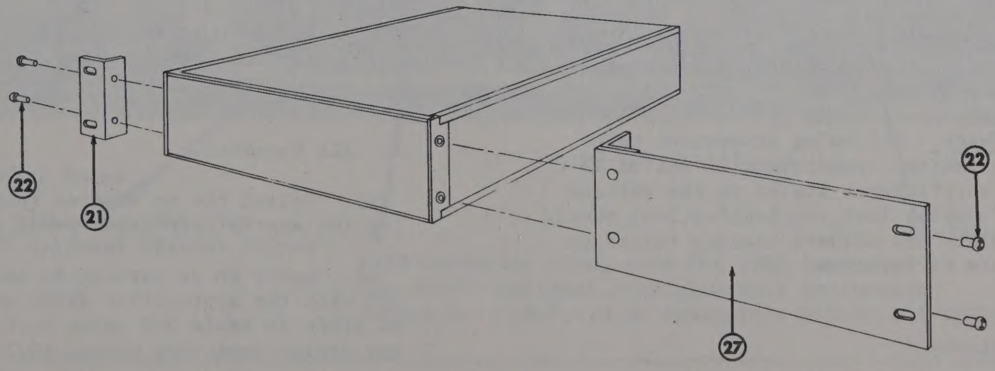

FIGURE 18. Model 2000 Single Rack Mounting Kit - Exploded View.

SECTION 5. MAINTENANCE

5-1. GENERAL. This section contains information necessary to maintain the instrument. Included are procedures for performance checks and calibration.

5-2. REQUIRED TEST EQUIPMENT. Recommended test equipment for checking and servicing the Model 171 are given in Table 5-1. Test equipment other than that listed may be substituted if the specifications in Table 5-1 are equalled or exceeded. These specifications are the minimum requirements for testing the Model 171.

5-3. PERFORMANCE CHECKS. Use the following procedure to verify proper operation of the instrument. All measurements should be made at an ambient temperature of 25°C and relative humidity below 50% (otherwise the instruments temperature coefficients should be considered when verifying accuracy). If the instrument is out of specification at any point, perform the complete recalibration as given in paragraphs 5-4 in the exact order specified.

a. Preliminary Setup.

1. Set the rear panel line switch for either 117V or 234V depending on the line voltage available.

2. Check the fuse on the rear panel for proper rating.
117V: 1/2A SLO-BLO, 3AG, Keithley FU-4
234V: 1/4A SLO-BLO, 3AG, Keithley FU-38

3. Connect the power cord to a variable transformer which has been set to 117V ±1V or 234V ±2V depending on the line voltage available.

4. Connect the shorting link on the front panel between LO and CASE. For maximum operator safety, make certain that the chassis is connected to earth ground by way of the third-conductor on the line cord or by way of a separate clip lead from CASE to earth ground.

5. Set the Power switch to "ON" and allow the instrument to stabilize at ambient temperature for at least one hour.

b. Accuracy Check. Following procedures below, note that if the ambient temperature is not at 25°C the temperature coefficients listed in the various "Accuracy Check" Tables (5-2,5-3,5-4,5-5,5-6) should be used to calculate the allowed reading tolerance due to temperature differences.

1. DCV Function.

a). Select the dc voltage function by depressing the appropriate front panel pushbutton.

b). Set the RANGE switch (S902) to the 10 mV range.

c). Apply a short circuit between the HI and LO input terminals. The display should indicate 0.000 mV. If necessary, adjust the rear panel zero control to obtain a zero reading with the polarity indicator alternately flashing between + and -.

d). Remove the short circuit and apply dc voltages to the input of the 171 with the appropriate RANGE switch setting as given in Table 5-2 using DC Voltage Source (A).

e). Verify that the readings on the display are within the tolerances stated.

2. ACV Function.

a). Select the ac voltage function by depressing the appropriate front panel pushbutton.

b). Set the sensitivity switch to the 100 mV range.

c). Apply a short circuit between the HI and LO input terminals. The display should indicate 00.00 mV within one digit of zero.

d). Remove the short circuit and apply ac voltages to the input of the 171 with the appropriate RANGE switch setting as given in Table 5-3 using AC Calibrator (C).

e). Verify that the readings on the display are within the tolerances stated.

3. DCA Function.

a). Select the dc amperes function by depressing the appropriate front panel pushbutton.

b). Apply the dc current to the input of the 171 with the appropriate RANGE switch setting as given in Table 5-4 using Current Source (D).

c). Verify that the readings on the display are within the tolerances stated.

4. ACA Function.

a). Select the ac amperes function by depressing the appropriate front panel pushbutton.

b). Apply an ac current to the input of the 171 with the appropriate RANGE switch setting as given in Table 5-5 using AC Calibrator (C) and series resistors having ±0.1% accuracy.

c). Verify that the readings on the display are within the tolerances stated.

5. OHMS Function.

a). Select the ohms function by depressing the appropriate front panel pushbutton.

b). Apply resistance values to the input of the 171 with the appropriate RANGE switch setting as given in Table 5-6 using Resistance Source (E).

c). Verify that the readings on the display are within the tolerances stated.

6. Normal Mode AC Rejection.

a). Select the dc voltage function by depressing the appropriate front panel pushbutton.

b). Set the RANGE switch sensitivity to 1V.

c). Apply a 60 Hz 9.5 volt p-p sine wave to the input of the 171 using Oscillator (F), transformer coupled to eliminate dc offsets.

d). When the 60 Hz signal is applied, the display reading should not vary more than 30 digits, exclusive of noise and drift.

e). Steps a through d may be repeated if desired for Oscillator settings from 50 Hz to 180 Hz at 10 Hz multiples.

7. Common Mode AC Rejection.

a). Select the dc voltage function by depressing the appropriate front panel pushbutton. Remove the shorting link on the front panel between LO and CASE.

b). Set the RANGE switch sensitivity to 1V.

c). Connect a one-kilohm (5-10% tolerance) resistor between input terminals HI and LO. Apply a 60 Hz 50-volt p-p sine wave to the CASE and HI input of the 171 using Oscillator (F).

d). When the 60 Hz signal is applied, the display reading should not vary more than 5 digits, exclusive of noise and drift.

e). Steps a through d may be repeated if desired for Oscillator settings from dc to 180 Hz at 10 Hz multiples.

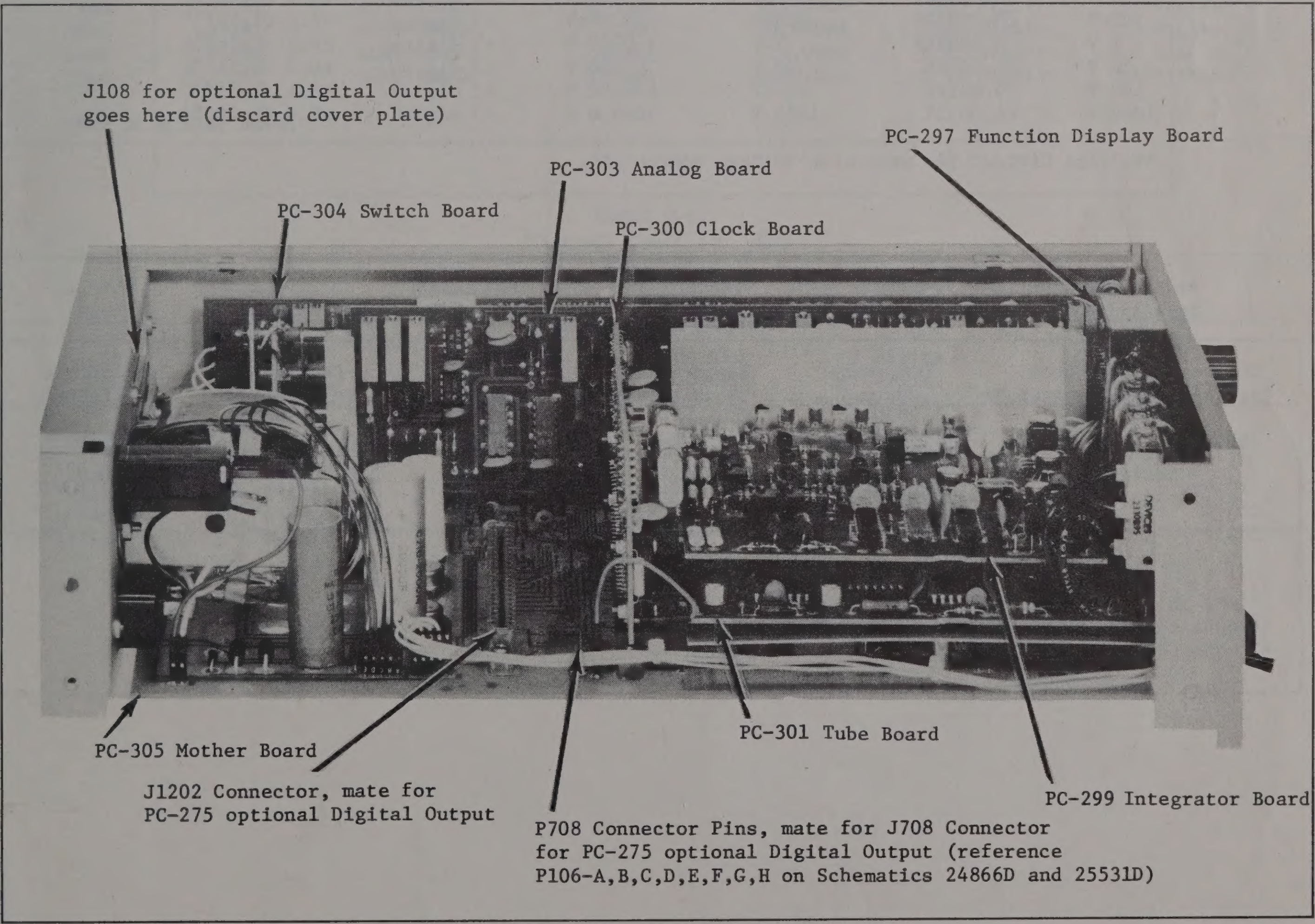

FIGURE 19. Cutaway View Showing PC-Board Locations.

TABLE 5-1.
Performance Checks Test Equipment

Item	Description	Specification	Mfr.	Model
A	Voltage Source, DC	10V,100V,1000V @ ±0.0032% (use with Item B for voltages below 10V)	Fluke	3330B
B	Voltage Divider	10:1,100:1,1000:1 @ 3ppm	--	--
C	Voltage Source, AC (AC Calibrator)	As required in Tables 5-3 and 5-5 @ ±0.04% (calibrated)	Hewlett-Packard	745A/746A
D	Current Source, DC	100μA to 100 mA @ ±0.0065%	Fluke	3330B
E	Resistance Source	As required in Table 5-6.	General Radio	1433
F	Oscillator	As required in Paragraphs 5-3b6 and 5-3b7.	Hewlett-Packard	202C

TABLE 5-2.
Accuracy Check for DCV

Source Input	Source Accuracy	Range Switch Sensitivity	Display Reading	Reading Tolerance	Temperature Coefficient
10mV	±0.0035%*	10mV	10.000mV	±4 digits	±0.4 digit/°C
100mV	±0.0035%*	100mV	100.00mV	±3 digits	±0.4 digit/°C
1 V	±0.0035%*	1 V	1.0000 V	±3 digits	±0.4 digit/°C
10 V	±0.0032%	10 V	10.000 V	±3 digits	±0.4 digit/°C
100 V	±0.0032%	100 V	100.00 V	±3 digits	±0.4 digit/°C
1000 V	±0.0032%	1000 V	1000.0 V	±3 digits	±0.4 digit/°C

*Voltage Divider (B) used with Voltage Source (A).

TABLE 5-3.
Accuracy Check for ACV

Source Input(1)	Source Accuracy	Frequency Range	Range Switch Sensitivity	Display Reading	Reading Tolerance	Temperature Coefficient
100mV	±0.04%	40Hz-100kHz	100mV	100.00mV	±60 digits(2)	±36 digits/°C
1 V	±0.04%	40Hz-100kHz	1 V	1.0000 V	±34 digits(3)	±35 digits/°C
10 V	±0.04%	40Hz-40 kHz	10 V	10.000 V	±34 digits	±35 digits/°C
100 V	±0.04%	40Hz-40 kHz	100 V	100.00 V	±34 digits	±35 digits/°C
1000 V	±0.04%	40Hz-10 kHz	1000 V	1000.0 V	±44 digits	±35 digits/°C

(1)RMS of a sine wave.
(2)40Hz to 10kHz; ±300 digits from 10kHz to 100kHz.
(3)40Hz to 40kHz; ±300 digits from 40kHz to 100kHz.

TABLE 5-4.
Accuracy Check for DCA

Source Input	Source Accuracy	Range Switch Sensitivity	Display Reading	Reading Tolerance	Temperature Coefficient
1μA	±0.01%	1μA	1.0000μA	±8 digits	±0.7 digit/°C
10μA	±0.01%	10μA	10.000μA	±8 digits	±0.7 digit/°C
100μA	±0.0065%	100μA	100.00μA	±8 digits	±0.7 digit/°C
1mA	±0.0065%	1mA	1.0000mA	±8 digits	±0.7 digit/°C
10mA	±0.0065%	10mA	10.000mA	±8 digits	±0.7 digit/°C
100mA	±0.0065%	100mA	100.00mA	±8 digits	±0.7 digit/°C
100mA	±0.0065%	1000mA	0100.0mA	±4 digits	±0.7 digit/°C

TABLE 5-5.
Accuracy Check for ACA

Source Input*	Source Accuracy	Frequency Range	Range Switch Sensitivity	Display Reading	Reading Tolerance	Temperature Coefficient
1μA	±0.14%	40Hz-120Hz	1μA	1.0000μA	±160 digits	±5 digits/°C
10μA	±0.14%	40Hz-10kHz	10μA	10.000μA	±160 digits	±5 digits/°C
100μA	±0.14%	40Hz-10kHz.	100μA	100.00μA	±160 digits	±5 digits/°C
1mA	±0.14%	40Hz-10kHz	1mA	1.0000mA	±160 digits	±5 digits/°C
10mA	±0.14%	40Hz-10kHz	10mA	10.000mA	±160 digits	±5 digits/°C
10mA	±0.14%	40Hz-10kHz	100mA	010.00mA	± 25 digits	±5 digits/°C
10mA	±0.14%	40Hz-10kHz	1000mA	0010.0mA	± 12 digits	±5 digits/°C

*RMS of a sine wave.

TABLE 5-6.
Accuracy Check for OHMS

Source Input	Source Accuracy	Range Switch Sensitivity	Display Reading	Reading Tolerance	Temperature Coefficient
1kΩ	±0.007%	1kΩ	1.0000kΩ	±7 digits	±1 digit/°C
10kΩ	±0.007%	10kΩ	10.000kΩ	±7 digits	±1 digit/°C
100kΩ	±0.007%	100kΩ	100.00kΩ	±7 digits	±1 digit/°C
1MΩ	±0.007%	1MΩ	1.0000MΩ	±7 digits	±1 digit/°C
10MΩ	±0.022%	10MΩ	10.000MΩ	±22 digits	±1 digit/°C
100MΩ	±0.03%	100MΩ	100.00MΩ	±302 digits	±4 digits/°C
1000MΩ	±2%	1000MΩ	1000.0MΩ	±2002 digits	±34 digits/°C

5-4. ADJUSTMENT AND CALIBRATION. Use the following procedure to verify proper operation of the instrument every 90 days. If the instrument is out of specification at any point, perform the calibration procedure specified in the exact order specified. Recommended test equipment for calibrating the Model 171 are given in Table 5-7. Calibration equipment other than that listed may be substituted if the specifications in Table 5-7 are equalled or exceeded. These specifications are the minimum requirements for calibrating the 171.

a. Preliminary Setup.

1. Set the rear panel line switch for either 117V or 234V depending on the line voltage available.

2. Check the fuse on the rear penel for proper rating.

117V: 1/2A SLO-BLO, 3AG, Keithley FU-4
234V: 1/4A SLO-BLO, 3AG, Keithley FU-38

3. Connect the power cord to a variable transformer which has been set to 117V ±1V or 234V ±2V depending on the line voltage available.

4. Connect the shorting link on the front panel between LO and CASE. For maximum operator safety, make certain that the chassis is connected to earth ground by way of the third-conductor on the line cord or by way of a separate clip lead from CASE to earth ground.

5. Set the Power switch to "ON".

b. Power Supply Check/Calibration. Remove the top cover of the 171. Make all measurements with Digital Voltmeter (K).

1. ±5 Volt Supply. Measure the ±5V supply between ±5V (TP-14, set Figure 21) on the integrator board (PC-301) and input LO. If a reading of +5V ±250mV is not obtained, proceed with troubleshooting and repair.

2. +15 Volt Supply. Measure the +15V supply between +15V (TP-2, see Figure 21) on the integrator board (PC-301) and input LO. The Digital Voltmeter (K) should read +15V ±10mV. If necessary, adjust potentiometer R708 (see Figure 21) on the mother board (PC-305).

3. -15 Volt Supply. Measure the -15V supply between -15V (TP-8, see Figure 21) on the integrator board (PC-301) and input LO. The DVM should read -15V ±10mV. If necessary, adjust potentiometer R711 (see Figure 21) on the mother board (PC-305).

4. +210 Volt Supply. Measure the +210V supply between +210V (across R702 on the mother board PC-305; see Figure 21) and input LO. If a reading of +200 to +240 volts is not obtained, proceed with troubleshooting and repair.

c. General Instructions before Calibration.

1. Calibration should be performed in a controlled environment of 25 ±1°C and relative humidity below 50%.

2. The Model 171 should have one (1) hour warm-up.

3. Use the special calibration top cover provided with the Model 1713 Extender Card Kit (J). Unless otherwise indicated, Access Covers A,B, and C (see Figure 20) should be closed. The pc-board extender cards provide in the Model 1713 are not required for calibration but are used in troubleshooting and repair.

4. Perform all operations only in the order specified.

5. Do not move the 171 while calibration is being performed.

6. Unless otherwise indicated, reference all measurements to the input LO terminal of the 171.

7. Unless an input source is specified, the input HI of the 171 should be shorted to the input LO with a pure-copper shorting plug (to minimize thermals; see Paragraph 2-1a1).

d. DC Voltage Mode. Select the dc voltage function by depressing the front panel pushbutton S903. Set RANGE switch S902 as required.

1. Zero Adjustments.

a). Driven Guard.

1). Slide Access Cover B (see Figure 20) to the extreme right position.

2). Set the 171 RANGE switch to 100 mV full scale.

3). Using Null Detector (C) on the 100μV full scale range, differentially monitor between TP-15 and TP-16 (see Figures 20 and 21) for a null reading of 0.0 ±20μVdc. Adjust R527 (see Figures 20 and 21) if necessary.

b). DC Balance and Analog Amplifier Offset.

1). Slide Access Cover B (see Figure 20) to the middle position.

2). Set the 171 RANGE switch to 1V full scale.

3). Using Null Detector (C) on the 10μV full-scale range, monitor the analog output (J502) of the 171 for 0.0 ±5μVdc. If necessary, adjust R526 (See Figures 20 and 21).

4). Set the 171 RANGE switch to 10V full scale.

5). Using Null Detector (C) on the 10μV full-scale range, monitor the analog output

(J502) of the 171 for 0.0 ±5μVdc. If necessary, adjust R507 (see Figures 20 and 21).

6). If an adjustment was necessary in Step 5, repeat steps 1 through 6.

c). Analog Amplifier Zero.

1). Close all Access Covers (see Figure 20). Set the 171 RANGE switch to 10mV full scale.

2). Using Null Detector (C) on the 300μV full-scale range, monitor the analog output (J502) of the 171 for 0.0 ±50μVdc. If necessary, adjust R723 (see Figure 3).

3). If an adjustment was necessary, repeat Paragraph 5-4d1b, steps 1 through 6, and Paragraph 5-4d1c, steps 1 through 3.

2. 10mV and 100mV Calibration/Linearity.

a). Slide Access Cover B (see Figure 20) to the middle position.

b). Set up test equipment as follows:

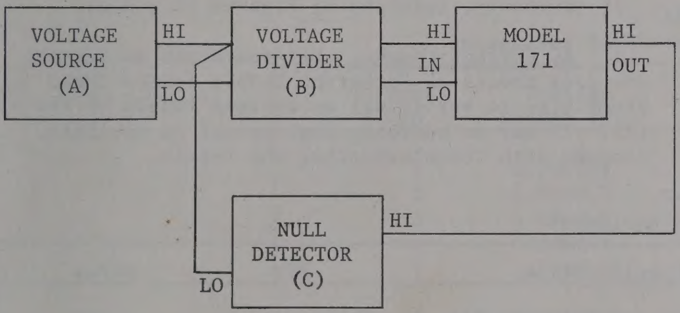

c). With all equipment turned on and 0.0 Volt output from Voltage Source (A), set the voltage-range switch on the Voltage Source to 10 volts and using the zero adjustment of Null Detector (K) or an equivalent, stable voltage-bucking circuit.

d). Now apply dc voltages to the 171 with appropriate RANGE switch settings as shown in Table 5-8. Make the potentiometer adjustments indicated, if required, referencing Figures 20 and 21.

3. Integrator Zero/Integrator Reference Voltage/ Amplifier Linearity.

a). Open Access Cover A (see Figure 20).

b). Set the 171 RANGE switch to 1V full scale.

c). Adjust R301 (see Figures 20 and 21), if required, to obtain a display on the 171 that is flashing between + and - .0000.

d). Using Voltage Source (D), supply inputs to the 171 as specified in Table 5-9. Make the potentiometer adjustments indicated, if required, referencing Figures 20 and 21.

4. 10V, 100V, 1000V Calibration.

a). Open Access Cover C (see Figure 20).

b). Using Voltage-Source (A), supply inputs to the 171 with appropriate RANGE switch settings as specified in Table 5-10. Make the potentiometer adjustments indicated, if required, referencing Figures 20 and 21.

<u>e. DC Current Mode.</u> Select the dc current function by depressing the front panel pushbutton S906. Set RANGE switch S902 as required.

1. 1000 mA Calibration.

a). Open Access Cover C (see Figure 20).

b). Set up test equipment as follows:

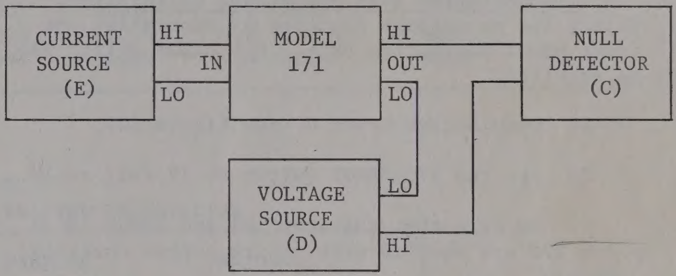

c). Set the 171 RANGE switch to 1000 mA full scale.

d). Set Null Detector (C) to the 300μV full-scale range.

e). Set the Current Source (E) to the 100.00mA range with the current output at 0.0mA.

f). Set Voltage Source (D) for a 0.0mV output. Observe that Null Detector (C) reads 0.0 ±100μV. Zero the Null Detector while in this mode.

g). Set Voltage Source (D) for a 100.0mV output and set Current Source (E) for a 100.00mA output.

h). Set the Null Detector to the 100μV full-scale range. The Null Detector should read 0.0 ± 20μV.

i). Remove the Null Detector from the circuit and zero.

2. 1μA to 100mA Calibration.

a). Open Access Cover C (see Figure 20).

b). Using Current Source (E), supply inputs to the 171 with appropriate RANGE switch settings as specified in Table 5-11, Test Nos. 1 through 8. Make the potentiometer adjustment indicated, if required, referencing Figures 20 and 21.

c). Using Voltage Source (A) and Current Resistors (F), supply inputs to the 171 with appropriate RANGE switch settings as specified in Table 5-11, Test Nos. 9 through 12. Note

that the shielded (metal) enclosure that contains each or all Current Resistors (F) must be connected to the CASE input terminal of the 171.

f. Ohms Calibration. Select the ohms function by depressing the front panel pushbutton S905. Set RANGE switch S902 as required.

1. Slide Access Cover B (see Figure 20) to the middle position.

2. Using Resistance Sources (G), supply inputs to the 171 with appropriate RANGE switch settings as specified in Table 5-12. Make the potentiometer COARSE and FINE adjustments indicated, if required, referencing Figures 20 and 21. Note that the shielded (metal) enclosure that contains each or all Resistance Sources (G) must be connected to the CASE input terminal of the 171.

g. AC Converter Bias and Offset Calibration. Select the ac voltage function by depressing the front panel pushbutton S904. Set RANGE switch S902 as required.

1. Open Access Cover C (see Figure 20).

2. Set the 171 RANGE switch to 1V full scale.

3. Be sure that the input HI and input LO of the 171 are shorted with a pure copper shorting plug.

4. Set Oscilloscope (H) to 20mV/division vertical and 0.2ms/division horizontal. Using the 10:1 (low capacity) probe (reference the 171 input LO) and Oscilloscope (H), monitor TP-23 (see Figures 20 and 21) for 0.0 ±200mVdc. If necessary, adjust potentiometer R1119 (see Figures 20 and 21).

5. Set Null Detector (C) to the 100μV full-scale range. Using the Null Detector, monitor the analog output (J502) for 0.0 ±20μVdc. If necessary, adjust Pot R1102 (see Figures 20 and 21).

h. AC Voltage Calibration.

1. Open Access Cover C (see Figure 20).

2. Using Voltage Source (I), that is the H-P 745A or H-P 745/H-P 746A, supply inputs to the 171 with appropriate RANGE switch settings as specified in Table 5-13. Test Nos. 1 through 21 are performed using only the H-P 745A AC Calibrator (or equivalent). Test Nos. 22 through 25 (1000 VAC RANGE) are performed using both the H-P 745A and H-P 746A High Voltage Amplifier (or equivalent).

3. Make the potentiometer adjustments indicated, if necessary, referencing Figures 20 and 21.

i. AC Current Checks. Reference the ac current accuracy checks of Paragraph 5-3b4; follow these procedures to verify all ac current ranges of the 171. If any ac current range cannot be verified, proceed with troubleshooting and repair.

TABLE 5-7.
Calibration Test Equipment

Item	Description	Specification	Mfr.	Model
A	Voltage Source, DC	1V,10V,100V,1000V @ ±0.0032%	Fluke	3330B
B	Voltage Divider	10:1,100:1 @ 3 ppm	--	---
C	Null Detector, DC	10μV,100μV,300μV @ ±2%	Keithley	155
D	Voltage Source, DC	As required in Table 5-9 and Paragraphs 5-5el @ ±0.003%	--	---
E	Current Source, DC	100μA to 100mA @ ±0.0065%	Fluke	3330B
F	Current Resistor, DC	1MΩ, 10MΩ @ ±0.01% in shielded (metal) enclosure(s)	--	---
G	Resistance Sources	100Ω, 1KΩ, 10kΩ, 100KΩ, 1MΩ, @ ±0.007%; 10MΩ@ ±0.022%; 100MΩ @ ±0.03%; 1000MΩ@ ±2%. All in shielded (metal) enclosures.	--	---
H	Oscilloscope	With Type 3A72 Amplifier and 10:1 low-capacity probe.	Tektronix	561A
I	Voltage Source, AC (AC Calibrator)	As required in Table 5-13 @ ±0.04% (calibrated)	Hewlett-Packard	745A/746A
J	Extender Card Kit	Special cal top cover (required for cal) and pc-board extenders (not required for cal).	Keithley	1713
K	Digital Voltmeter	4-1/2 digit, ±0.03%	Keithley	171

.100025
.050025
.010150

TABLE 5-8.
10mV and 100mV dc Calibration/Linearity

Test No.	Range Switch Sensitivity	Voltage Divider (B)	Voltage Source (A)	Null Range	Detector (K) Reading	Adjust Pot
1	100 mV	10:1	1.0000V	100μV	0.0 ±50 μV	R520
2	100 mV	10:1	1.9990V	100μV	0.0 ±100μV	NONE
3	100 mV	10:1	.5000V	100μV	0.0 ±25 μV	NONE
4	100 mV	10:1	.1000V	100μV	0.0 ± 5 μV	NONE
5	100 mV	10:1	- .1000V	100μV	0.0 ± 5 μV	NONE
6	100 mV	10:1	- .5000V	100μV	0.0 ±25 μV	NONE
7	100 mV	10:1	-1.0000V	100μV	0.0 ±50 μV	NONE
8	100 mV	10:1	-1.9990V	100μV	0.0 ±100μV	NONE
9	10 mV	100:1	1.0000V	300μV	0.0 ±150μV	R540
10	10 mV	100:1	1.9990V	300μV	0.0 ±200μV	NONE
11	10 mV	100:1	.5000V	300μV	0.0 ±125μV	NONE
12	10 mV	100:1	.1000V	300μV	0.0 ±105μV	NONE
13	10 mV	100:1	- .1000V	300μV	0.0 ±105μV	NONE
14	10 mV	100:1	- .5000V	300μV	0.0 ±125μV	NONE
15	10 mV	100:1	-1.0000V	300μV	0.0 ±150μV	NONE
16	10 mV	100:1	-1.9990V	300μV	0.0 ±200μV	NONE

50×10⁻³
.050 ± .000175
.000175
.0101 ± .150
.010×10⁻⁶

TABLE 5-9.
Integrator Reference dc Voltage Calibration

Test No.	Voltage Source (D)	Display Reading	Adjust Pot
1	1.50005V	1.5000 - 1.5001V	R331
2	1.9990 V	1.9990V	NONE
3	1.0000 V	1.0000 ± .0001 V	NONE
4	.5000 V	.5000 ± .0001 V	NONE
5	.1000 V	.1000 ± .0001 V	NONE
6	-1.50005V	-1.5000 - 1.5001V	R326
7	-1.9990 V	-1.9990	NONE
8	-1.0000 V	-1.0000 ± .0001 V	NONE
9	-.5000 V	-.5000 ± .0001 V	NONE
10	-.1000 V	-.1000 ± .0001 V	NONE

TABLE 5-10.
10V,100V,1000V dc Calibration

Test No.	Range Switch Sensitivity	Voltage Source (A)	Display Reading	Adjust Pot
1	10 V	10.0 V	10.000 ±.002V	R906
2	10 V	1.0 V	1.000 ±.001V	NONE
3	10 V	- 1.0 V	-1.000 ±.001V	NONE
4	10 V	-10.0 V	-10.000 ±.002V	NONE
5	100 V	100.0 V	100.00 ±.02 V	R908
6	100 V	10.0 V	10.00 ±.01 V	NONE
7	100 V	-10.0 V	-10.00 ±.01 V	NONE
8	100 V	-100.0 V	-100.00 ±.02 V	NONE
9	1000 V	1000.0 V	1000.0 ±.2 V	R910
10	1000 V	100.0 V	100.0 ±.1 V	NONE
11	1000 V	-100.0 V	-100.0 ±.1 V	NONE
12	1000 V	-1000.0 V	-1000.0 ±.2 V	NONE

TABLE 5-11.
1μA to 100mA dc Calibration

Test No.	Range Switch Sensitivity	Current Source (E) /Voltage Source (A)	Current Resistors (F)	Display Reading	Adjust Pot
1	100 mA	100.00 mA	NONE	100.00 ± .04 mA	R917
2	10 mA	10.00 mA	NONE	10.000 ± .005 mA	NONE
3	1 mA	1.00 mA	NONE	1.0000 ± .0005 mA	NONE
4	100 μA	100.00 μA	NONE	100.00 ± .05 μA	NONE
5	100 μA	-100.00 μA	NONE	-100.00 ± .05 μA	NONE
6	1 mA	-1.00 mA	NONE	-1.0000 ± .0005 mA	NONE
7	10 mA	-10.00 mA	NONE	-10.000 ± .005 mA	NONE
8	100 mA	-100.00 mA	NONE	-100.00 ± .04 mA	NONE
9	10 μA	-10.10 V	1MΩ	-10.000 ± .005 μA	NONE
10	1 μA	-10.10 V	10MΩ	-1.0000 ± .0005 μA	NONE
11	1 μA	10.10 V	10MΩ	1.0000 ± .0005 μA	NONE
12	10 μA	10.10 V	1MΩ	10.000 ± .005 μA	NONE

TABLE 5-12.
Ohms Calibration

Test No.	Range Switch Sensitivity	Resistance Sources (G)	Display Reading	Adjustment Pots Course	Fine
1	100 KΩ	100 KΩ	100.00 ± .01 KΩ	R1003	R1004
2	10 KΩ	10 KΩ	10.000 ± .005 KΩ	NONE	NONE
3	1 KΩ	1 KΩ	1.0000 ± .0005 KΩ	NONE	NONE
4	1 KΩ	100 Ω	.1000 ± .0002 KΩ	NONE	NONE
5	1 MΩ	1 MΩ	1.0000 ± .0004 MΩ	NONE	NONE
6	10 MΩ	10 MΩ	10.000 ± .011 MΩ	NONE	NONE
7	100 MΩ	100 MΩ	100.00 ± 2.00 MΩ	NONE	NONE
8	1000 MΩ	1000 MΩ	1000.0 + 25.0 MΩ - 50.0 MΩ	NONE	R1007
9	1000 MΩ	100 MΩ	100.0 ± 10.0 MΩ	NONE	NONE
10	1000 MΩ	OPEN	OVERLOAD	NONE	NONE

1,9418V
194,75KΩ

1.4904V
14.89μA

TABLE 5-13.
AC Voltage Calibration

Test No.	Range Switch Sensitivity	Voltage Source(I) Volts AC	(I) Frequency	Display Reading	Adjust Pot
1	1 V	1.0 V	1 kHz	1.0000 ± .0001V	R1110
2	1 V	1.0 V	100 kHz	1.0000 ± .0277V	NONE
3	1 V	1.0 V	40 kHz	1.0000 ± .0023V	NONE
4	1 V	100 V	40 kHz	.1000 ± .0006V	NONE
5	1 V	1.0 V	400 Hz	1.0000 ± .0027V	NONE
6	1 V	1.0 V	40 Hz	1.0000 ± .0023V	NONE
7	100 mV	100 mV	40 Hz	100.00 ± .44 V	NONE
8	100 mV	100 mV	400 Hz	100.00 ± .52 V	NONE
9	100 mV	100 mV	10 kHz	100.00 ± .52 V	NONE
10	100 mV	1.0 mV	10 kHz	1.00 ± .16 V	NONE
11	100 mV	100 mV	100 kHz	100.00 ± 2.84 V	NONE
12	10 V	10.0 V	1 kHz	10.000 ± .001 V	R606
13	10 V	10.0 V	40 kHz	10.000 ± .000 V	R610*
14	10 V	10.0 V	20 kHz	10.000 ± .023 V	NONE
15	10 V	1.0 V	40 kHz	1.000 ± .006 V	NONE
16	10 V	10.0 V	40 Hz	10.000 ± .023 V	NONE
17	100 V	100 V	40 kHz	100.00 ± .0 V	R609*
18	100 V	100 V	20 kHz	100.00 ± .23 V	NONE
19	100 V	10 V	40 kHz	10.00 ± .06 V	NONE
20	100 V	100 V	400 Hz	100.00 ± .23 V	NONE
21	100 V	100 V	40 Hz	100.00 ± .23 V	NONE
22	1000 V	1000 V	10 kHz	1000.0 ± .1 V	R608*
23	1000 V	100 V	10 kHz	100.0 ± .6 V	NONE
24	1000 V	1000 V	400 Hz	1000.0 ± 3.2 V	NONE
25	1000 V	1000 V	40 Hz	1000.0 ± 2.7 V	NONE

*The exact setting of the adjustment potentiometers R608, R609, and R610 may vary from unit to unit, depending on the frequency response characteristics of the individual amplifiers in the circuit. Most units will calibrate properly for the full span of specified frequency response, if the potentiometers are adjusted as shown above. Some units may require potentiometer adjustments to a slightly different display reading, always within ±23 digits, to assure proper calibration within the specified frequency response of a particular range.

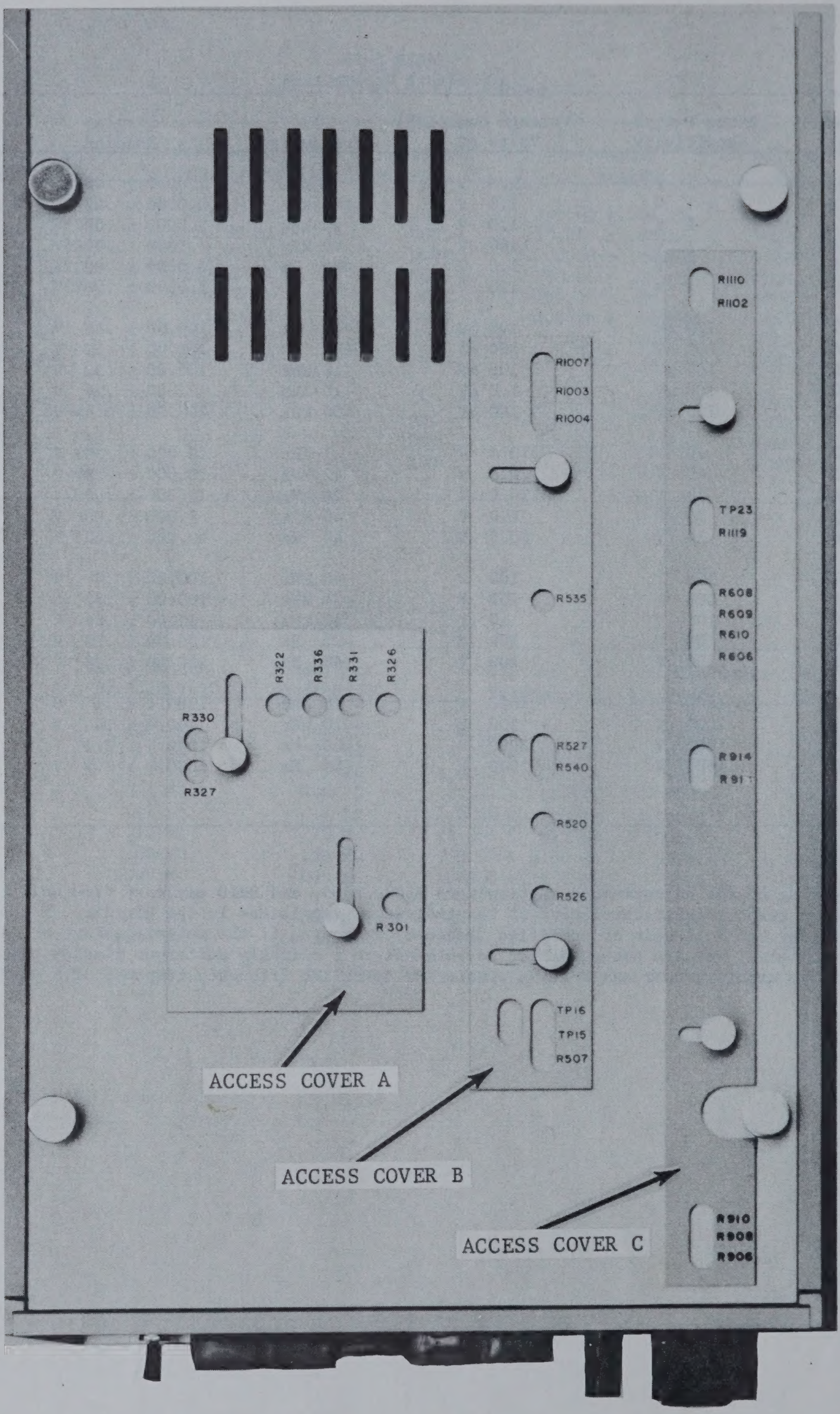

FIGURE 20. Calibration Adjustments and Test Points with Cal Cover.

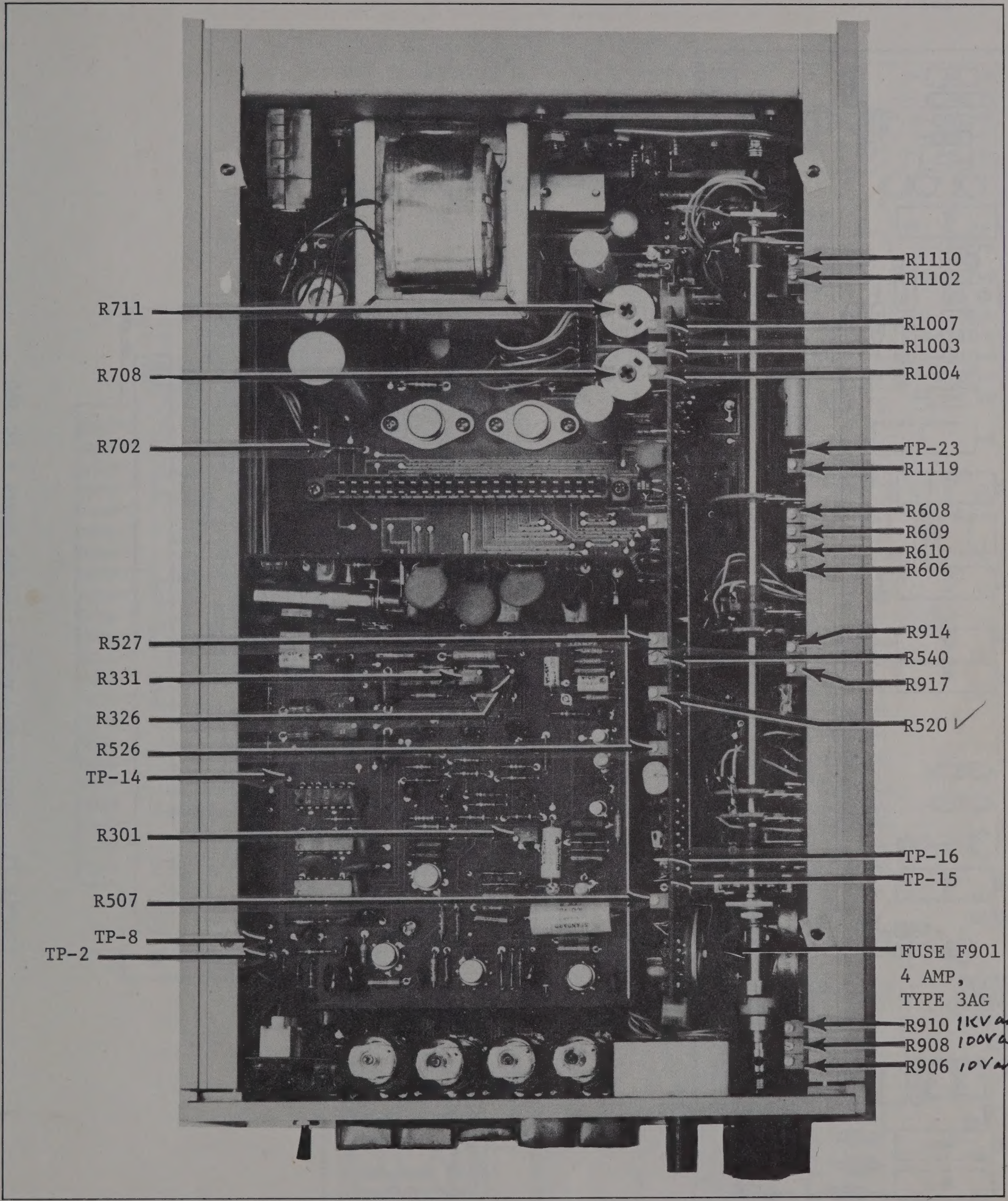

FIGURE 21. Calibration Adjustments and Test Points without Cover.

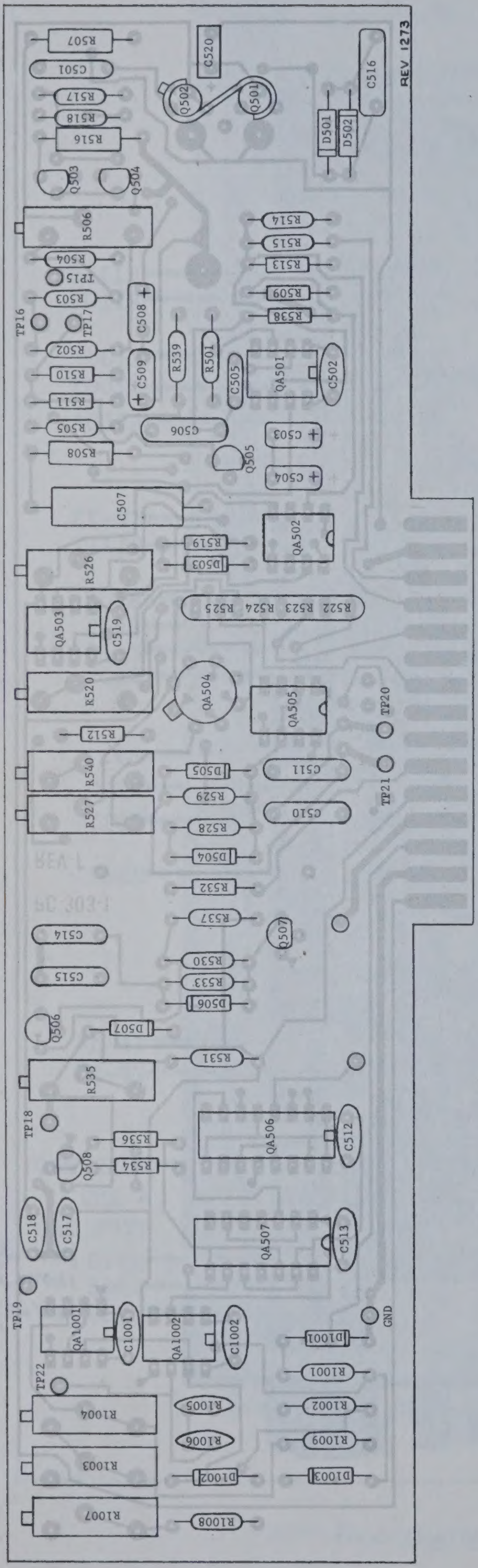

FIGURE 22. Component Layout - Analog Board - PC-303

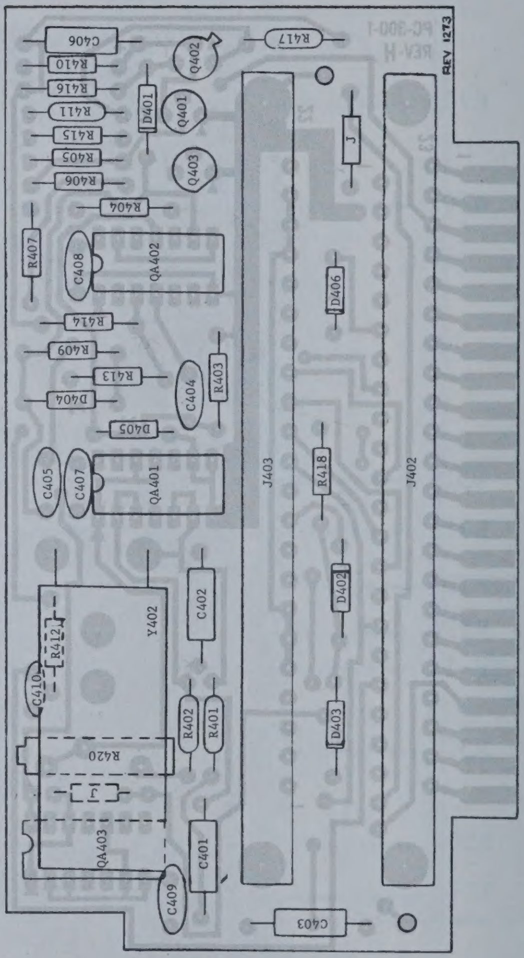

FIGURE 23. Component Layout - Clock Board - PC-300

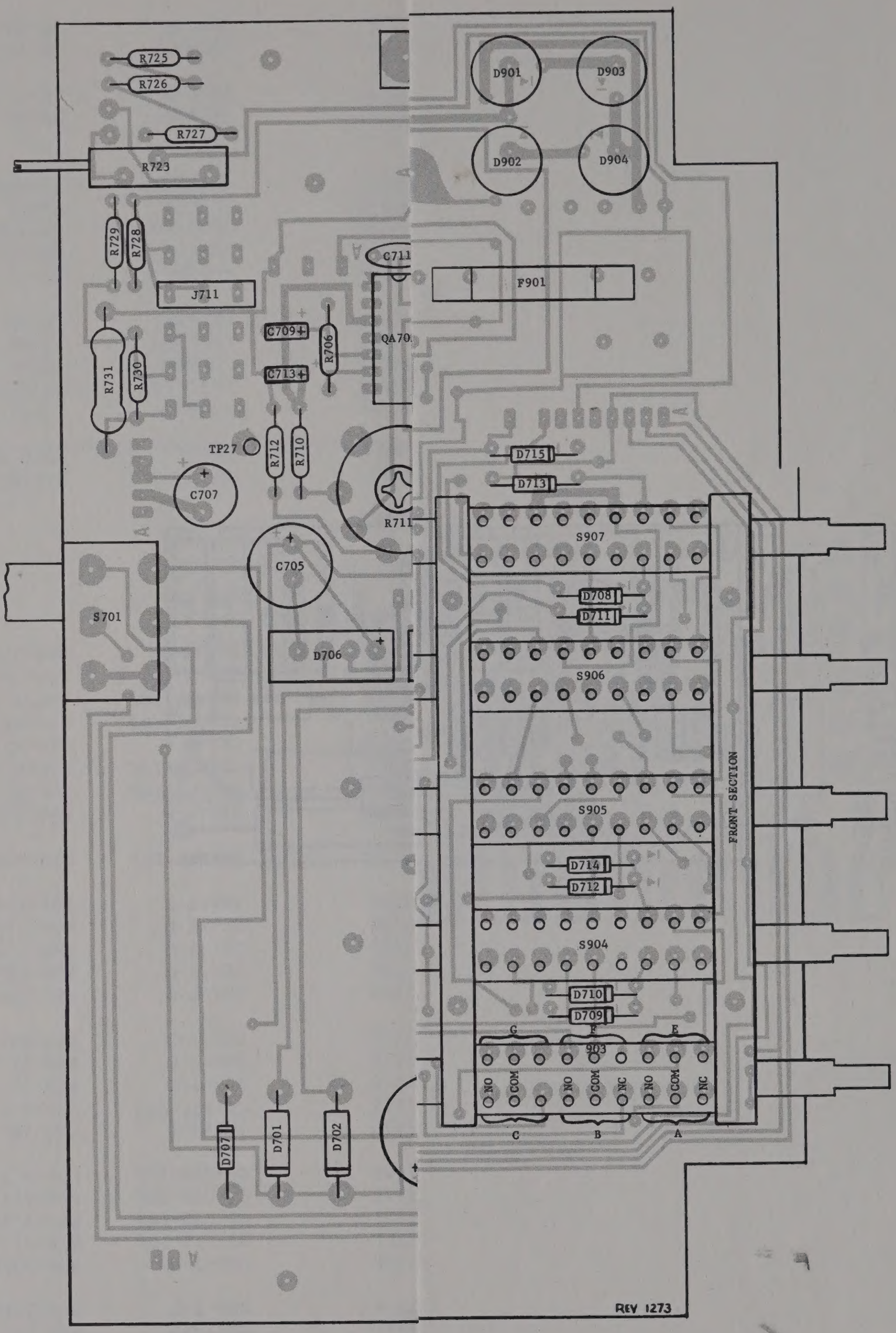
R725
R726
R727
R723
R729
R728
J711
C711
F901
C709
C713
R706
QA70
R731
R730
TP27
R712
R710
C707
R711
D901
D903
D902
D904
D715
D713
S907
C705
D708
D711
S701
D706
S906
S905
FRONT SECTION
D714
D712
S904
D710
D709
903
NO
COM
NC
D707
D701
D702
REV 1273

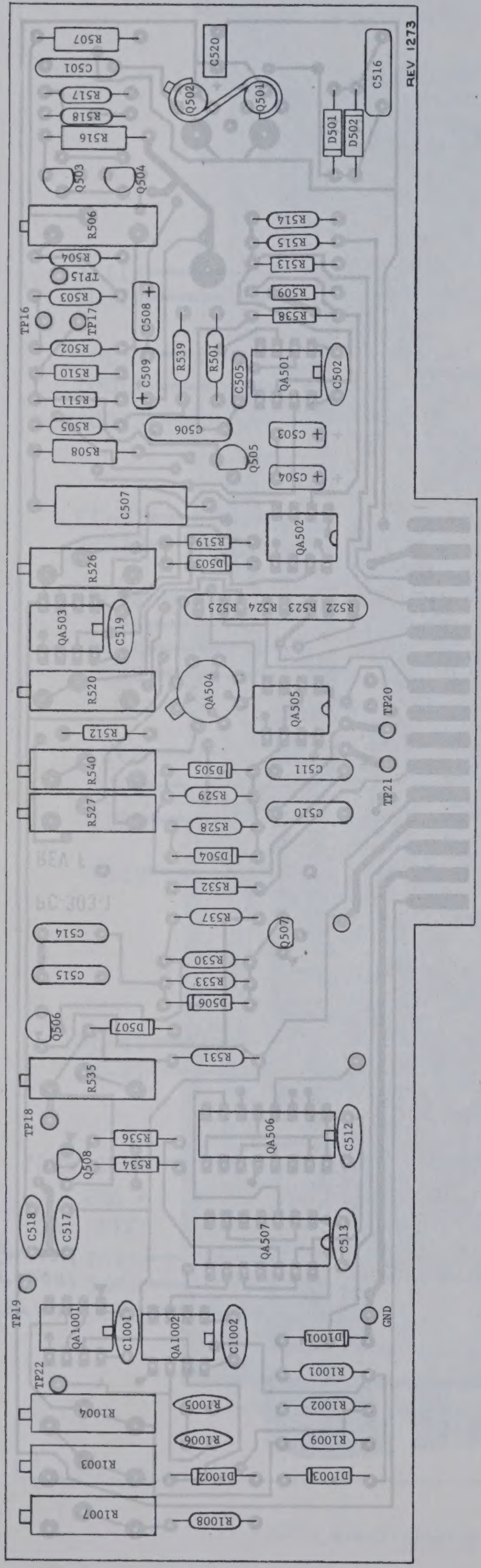

FIGURE 22. Component Layout - Analog Board - PC-303

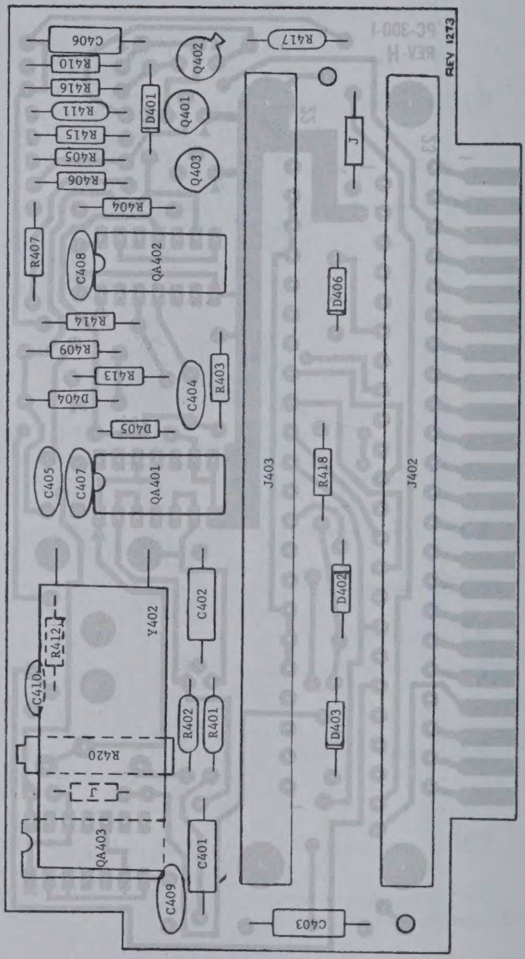

FIGURE 23. Component Layout - Clock Board - PC-300

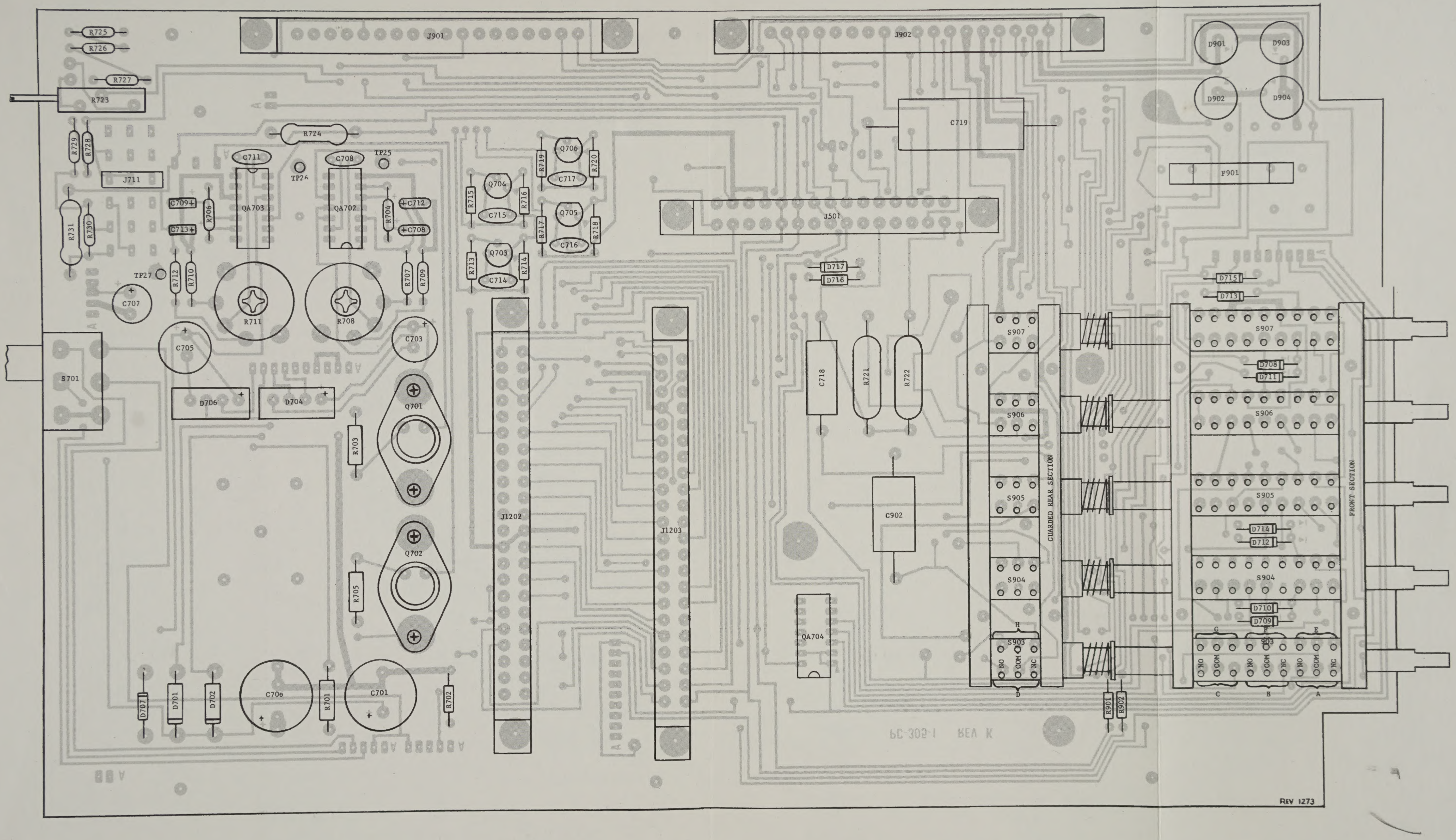

FIGURE 24. Component Layout - Mother Board - PC-305

d on RANGE switch S902.

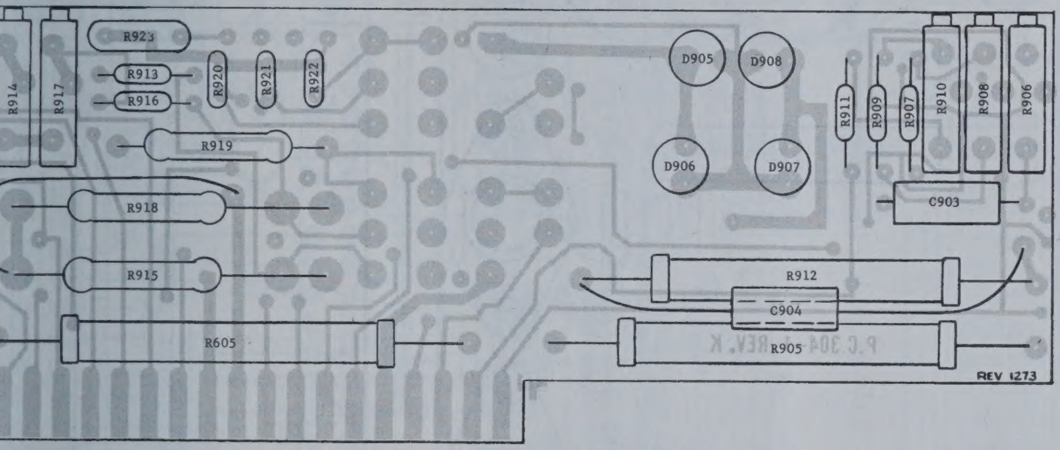

- Switch Board - PC-304

INTEGRATOR BOARD (PC-301) (continued)

RESISTORS (continued)

Circuit Desig.	Value	Rating	Type	Mfr. Code	Mfr. Desig.	Keithley Part No.	Fig. Ref.
R341	1 kΩ	10%, 1/4 W	Comp	01121	CB-102-10%	R76-1k	26
R342	392 kΩ	1%, 1/8 W	MtF	07716	CEA-T-0	R88-392k	26
R343	100 kΩ	1%, 1/8 W	MtF	07716	CEA-T-0	R88-100k	26
R344	1 MΩ	1%, 1/8 W	MtF	91637	MFF-1/8	R88-1M	26
R345	301 kΩ	1%, 1/8 W	MtF	07716	CEA-T-0	R88-301k	26
R346	301 kΩ	1%, 1/8 W	MtF	07716	CEA-T-0	R88-301k	26
R347	47 Ω	10%, 1/4 W	Comp	01121	CB-470-10%	R76-47	26
R348	2.2 kΩ	10%, 1/4 W	Comp	01121	CB-222-10%	R76-2.2k	26
R349	4.7 Ω	10%, 1/4 W	Comp	01121	CB-47R-10%	R76-4.7	26
R350	4.7 Ω	10%, 1/4 W	Comp	01121	CB-47R-10%	R76-4.7	26
R351	1 MΩ	1%, 1/8 W	MtF	91637	MFF-1/8	R88-1M	26
R352	4.7 Ω	10%, 1/4 W	Comp	01121	CB-47R-10%	R76-4.7	26
R353	1 kΩ	1%, 1/8 W	MtF	07716	CEA-T-0	R88-1k	26
R354	32.4 kΩ	1%, 1/8 W	MtF	07716	CEA-T-0	R88-32.4k	26
R355	634 Ω	1%, 1/8 W	MtF	07716	CEA-T-0	R88-634	26
R356	10 kΩ	1%, 1/8 W	MtF	07716	CEA-T-0	R88-10k	26
R357	20 kΩ	1%, 1/8 W	MtF	07716	CEA-T-0	R88-20k	26
R358	2.8 kΩ	1%, 1/8 W	MtF	07716	CEA-T-0	R88-2.8k	26
R359	2.49 kΩ	1%, 1/8 W	MtF	07716	CEA-T-0	R88-2.49k	26
R360	2.8 kΩ	1%, 1/8 W	MtF	07716	CEA-T-0	R88-2.8k	26
R361	470 Ω	10%, 1/4 W	Comp	01121	CB-471-10%	R76-470	26
R362	Not Used	--	-	-	-	-	--
R363	1.8 kΩ	1%, 1/8 W	MtF	07716	CEA-T-0	R88-1.8k	26
R364	1 kΩ	10%, 1/4 W	Comp	01121	CB-102-10%	R76-1k	26
R365	4.7 kΩ	10%, 1/4 W	Comp	01121	CB-47R-10%	R76-4.7k	26
*R366	80.6 kΩ	1%, 1/8 W	MtF	07716	CEA-T-0	R88-80.6k	26
R367	470 Ω	10%, 1/4 W	Comp	01121	CB-471-10%	R76-470	26
R368	4.7 kΩ	10%, 1/4 W	Comp	01121	CB-472-10%	R76-4.7k	26
R369	100 Ω	1%, 1/8 W	MtF	07716	CEA-T-0	R88-100	26
*R370	232 kΩ	1%, 1/8 W	MtF	07716	CEA-T-0	R88-232k	26

*Nominal value, selected during cal.

TRANSISTORS

Circuit Desig.	Type	Mfr. Code	Mfr. Desig.	Keithley Part No.	Fig. Ref.
Q301	N-Channel JFET, Case R110	32293	ITE4391	TG-76	26
Q302	P-Channel FET, Case TO-72	80164	Selected	25740A	26
Q303	Silicon, PNP, Case TO-106	07263	2N5139	TG-66	26
Q304	Silicon, PNP, Case TO-106	07263	2N5139	TG-66	26
Q305	N-Channel JFET, Case R110	32293	ITE4391	TG-76	26
Q306	Silicon, NPN, Case TO-106	07263	2N5134	TG-65	26
Q307	Silicon, PNP, Case TO-106	07263	2N5139	TG-66	26
Q308	P-Channel FET, Case TO-72	80164	Selected	25740A	26
Q309	Silicon, PNP, Case TO-106	07263	2N5139	TG-66	26
Q310	P-Channel FET, Case TO-72	80164	Selected	25740A	26
Q311	Not Used	---	---	---	--
Q312	Silicon, PNP, Case TO-106	07263	2N5139	TG-66	26
Q313, Q314	Dual N-Channel JFET, Case TO-18	32293	2N3956	TG-74**	26
Q315	N-Channel JFET, Case R110	32293	ITE4391	TG-76	26
Q316	Silicon, PNP, Case TO-106	07263	2N5139	TG-66	26

**Order TG- to replace both Q313 and Q314.

Note: C905 and C906 are located on RANGE switch S902.

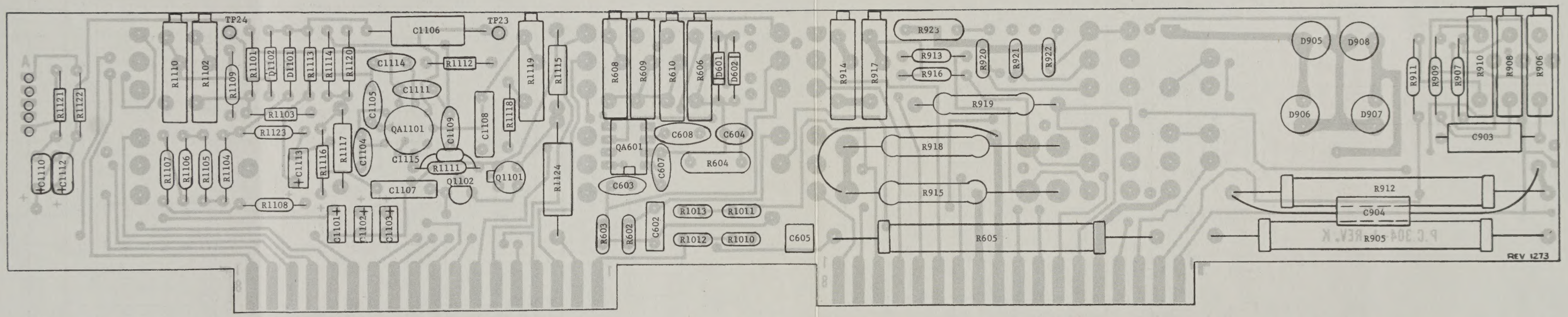

FIGURE 25. Component Layout - Switch Board - PC-304

INTEGRATOR BOARD (PC-301) (continued)

RESISTORS (continued)

Circuit Desig.	Value	Rating	Type	Mfr. Code	Mfr. Desig.	Keithley Part No.	Fig. Ref.
R341	1 kΩ	10%, 1/4 W	Comp	01121	CB-102-10%	R76-1k	26
R342	392 kΩ	1%, 1/8 W	MtF	07716	CEA-T-0	R88-392k	26
R343	100 kΩ	1%, 1/8 W	MtF	07716	CEA-T-0	R88-100k	26
R344	1 MΩ	1%, 1/8 W	MtF	91637	MFF-1/8	R88-1M	26
R345	301 kΩ	1%, 1/8 W	MtF	07716	CEA-T-0	R88-301k	26
R346	301 kΩ	1%, 1/8 W	MtF	07716	CEA-T-0	R88-301k	26
R347	47 Ω	10%, 1/4 W	Comp	01121	CB-470-10%	R76-47	26
R348	2.2 kΩ	10%, 1/4 W	Comp	01121	CB-222-10%	R76-2.2k	26
R349	4.7 Ω	10%, 1/4 W	Comp	01121	CB-47R-10%	R76-4.7	26
R350	4.7 Ω	10%, 1/4 W	Comp	01121	CB-47R-10%	R76-4.7	26
R351	1 MΩ	1%, 1/8 W	MtF	91637	MFF-1/8	R88-1M	26
R352	4.7 Ω	10%, 1/4 W	Comp	01121	CB-47R-10%	R76-4.7	26
R353	1 kΩ	1%, 1/8 W	MtF	07716	CEA-T-0	R88-1k	26
R354	32.4 kΩ	1%, 1/8 W	MtF	07716	CEA-T-0	R88-32.4k	26
R355	634 Ω	1%, 1/8 W	MtF	07716	CEA-T-0	R88-634	26
R356	10 kΩ	1%, 1/8 W	MtF	07716	CEA-T-0	R88-10k	26
R357	20 kΩ	1%, 1/8 W	MtF	07716	CEA-T-0	R88-20k	26
R358	2.8 kΩ	1%, 1/8 W	MtF	07716	CEA-T-0	R88-2.8k	26
R359	2.49 kΩ	1%, 1/8 W	MtF	07716	CEA-T-0	R88-2.49k	26
R360	2.8 kΩ	1%, 1/8 W	MtF	07716	CEA-T-0	R88-2.8k	26
R361	470 Ω	10%, 1/4 W	Comp	01121	CB-471-10%	R76-470	26
R362	Not Used	--	-	-	-	-	--
R363	1.8 kΩ	1%, 1/8 W	MtF	07716	CEA-T-0	R88-1.8k	26
R364	1 kΩ	10%, 1/4 W	Comp	01121	CB-102-10%	R76-1k	26
R365	4.7 kΩ	10%, 1/4 W	Comp	01121	CB-47R-10%	R76-4.7k	26
*R366	80.6 kΩ	1%, 1/8 W	MtF	07716	CEA-T-0	R88-80.6k	26
R367	470 Ω	10%, 1/4 W	Comp	01121	CB-471-10%	R76-470	26
R368	4.7 kΩ	10%, 1/4 W	Comp	01121	CB-472-10%	R76-4.7k	26
R369	100 Ω	1%, 1/8 W	MtF	07716	CEA-T-0	R88-100	26
*R370	232 kΩ	1%, 1/8 W	MtF	07716	CEA-T-0	R88-232k	26

*Nominal value, selected during cal.

TRANSISTORS

Circuit Desig.	Type	Mfr. Code	Mfr. Desig.	Keithley Part No.	Fig. Ref.
Q301	N-Channel JFET, Case R110	32293	ITE4391	TG-76	26
Q302	P-Channel FET, Case TO-72	80164	Selected	25740A	26
Q303	Silicon, PNP, Case TO-106	07263	2N5139	TG-66	26
Q304	Silicon, PNP, Case TO-106	07263	2N5139	TG-66	26
Q305	N-Channel JFET, Case R110	32293	ITE4391	TG-76	26
Q306	Silicon, NPN, Case TO-106	07263	2N5134	TG-65	26
Q307	Silicon, PNP, Case TO-106	07263	2N5139	TG-66	26
Q308	P-Channel FET, Case TO-72	80164	Selected	25740A	26
Q309	Silicon, PNP, Case TO-106	07263	2N5139	TG-66	26
Q310	P-Channel FET, Case TO-72	80164	Selected	25740A	26
Q311	Not Used	---	---	---	--
Q312	Silicon, PNP, Case TO-106	07263	2N5139	TG-66	26
Q313, Q314	Dual N-Channel JFET, Case TO-18	32293	2N3956	TG-74**	26
Q315	N-Channel JFET, Case R110	32293	ITE4391	TG-76	26
Q316	Silicon, PNP, Case TO-106	07263	2N5139	TG-66	26

**Order TG- to replace both Q313 and Q314.

CLOCK BOARD, "400" SERIES (PC-300)

CAPACITORS

Circuit Desig.	Value	Rating	Type	Mfr. Code	Mfr. Desig.	Keithley Part No.	Fig. Ref.
C401	.05 μF	50 V	MPC	14752	625B1A503-J	C201-.05M	25
C402	.068 μF	50 V	MPC	14752	625B1A683-J	C201-.068M	25
C403	.01 μF	50 V	MPC	14752	625B1A103-J	C201-.01M	25
C404	.01 μF	500V	CerD	56289	5GAS-S10	C22-.01M	25
C405	.01 μF	500V	CerD	56289	5GAS-S10	C22-.01M	25
C406	10 μF	20 V	ETT	17554	CCL-020-10610	C80-10M	25
C407	.01 μF	500V	CerD	56289	5GAS-S10	C22-.01M	25
C408	.01 μF	500V	CerD	56289	5GAS-S10	C22-.01M	25
C409	.01 μF	500V	CerD	56289	5GAS-S10	C22-.01M	25
C410	.47 μF	50 V	CerF	72982	8131-050-651-474M	C237-.47M	25

DIODES

Circuit Desig.	Type	Mfr. Code	Mfr. Desig.	Keithley Part No.	Fig. Ref.
D401	Silicon	07263	1N4607	RF-41	25
D402	Germanium	15238	1N87	RF-39	25
D403	Germanium	15238	1N87	RF-39	25
D404	Silicon	01295	1N645	RF-14	25
D405	Silicon	01295	1N914	RF-28	25
D406	Silicon	01295	1N914	RF-28	25

INTEGRATED CIRCUITS

Circuit Desig.	Type	Mfr. Code	Mfr. Desig.	Keithley Part No.	Fig. Ref.
QA401	Positive NOR Gates, 14-pin DIP	01295	SN7402N	IC-32	25
QA402	Positive NOR Gates, 14-pin DIP	01295	SN7402N	IC-32	25
QA403	Decade Counters, 14-pin DIP	01295	SN7490N	IC-37	25

MISCELLANEOUS

Circuit Desig.	Type	Mfr. Code	Mfr. Desig.	Keithley Part No.	Fig. Ref.
Y401	Resonator, Crystal, 100 kHz	00815	NE-13E-100KC	CR-2	25
J402	Connector, PC Mount, 22-contact (double sided)	09922	PSCADD(22)-12	CS-205	25
J403	Connector, PC Mount, 22-contact	09922	PSC4SS(22)-12	CS-182	25
--	Jumper	GETTIG ENGRG.	L-2007-2	J-3	25
--	Jumper	GETTIG ENGRG.	L-2007-2	J-3	25

CLOCK BOARD (PC-300) (continued)

RESISTORS

Circuit Desig.	Value	Rating	Type	Mfr. Code	Mfr. Desig.	Keithley Part No.	Fig. Ref.
R401	402 Ω	1%, 1/8 W	MtF	75042	CEA-T-0	R88-402	25
R402	301 Ω	1%, 1/8 W	MtF	75042	CEA-T-0	R88-301	25
R403	220 Ω	10%, 1/4W	Comp	01121	CB221-10%	R76-220	25
R404	470 Ω	10%, 1/4W	Comp	01121	CB471-10%	R76-470	25
R405	3.9KΩ	10%, 1/4W	Comp	01121	CB392-10%	R76-3.9K	25
R406	3.9KΩ	10%, 1/4W	Comp	01121	CB392-10%	R76-3.9K	25
R407	1.5KΩ	10%, 1/4W	Comp	01121	CB152-10%	R76-1.5K	25
R408	Not Used	---	--	---	---	---	--
R409	220 Ω	10%, 1/4W	Comp	01121	CB221-10%	R76-220	25
R410	22 KΩ	10%, 1/4W	Comp	01121	CB223-10%	R76-22K	25
R411	1 KΩ	1%, 1/8 W	MtF	75042	CEA-T-0	R88-1K	25
R412	100 Ω	10%, 1/4W	Comp	01121	CB101-10%	R76-100	25
R413	1.5KΩ	10%, 1/4W	Comp	01121	CB152-10%	R76-1.5K	25
R414	330 Ω	10%, 1/4W	Comp	01121	CB331-10%	R76-330	25
R415	10 KΩ	10%, 1/4W	Comp	01121	CB103-10%	R76-10K	25
R416	68 Ω	10%, 1/4W	Comp	01121	CB680-10%	R76-68	25
R417	4.02KΩ	1%, 1/8 W	MtF	75042	CEA-T-0	R88-4.02K	25
R418	10 KΩ	10%, 1/4W	Comp	01121	CB103-10%	R76-10K	25
R419	Not Used	---	----	-----	----	-----	--
R420	500 Ω	.75 W	CerV	73138	89P-500	RP89-500	

TRANSISTORS

Circuit Desig.	Type	Mfr. Code	Mfr. Desig.	Keithley Part No.	Fig. Ref.
Q401	Silicon, NPN, Case TO-106	07263	2N5134	TG-65	25
Q402	Silicon, Unijunction	03508	2N2646	TG-52	25
Q403	Silicon, NPN, Case TO-106	07263	2N5134	TG-65	25

ANALOG BOARD, "500" & "1000" SERIES (PC-303)

CAPACITORS

Circuit Desig.	Value	Rating	Type	Mfr. Code	Mfr. Desig.	Keithley Part No.	Fig. Ref.
C501	.001 μF	250 V	MP*	73445	C280AE/P1K	C178-.001M	23
C502	470 pF	1000V	CerD	72982	838-000-Z5RO-471K	C64-470P	23
C503	22 μF	20 V	ETT	17554	TD1-20-226-20	C179-22M	23
C504	22 μF	20 V	ETT	17554	TD1-20-226-20	C179-22M	23
C505	680 pF	1000V	CerD	72982	838-000-Z5RO-681K	C64-680P	23
C506	.1 μF	250 V	MP*	73445	C280AE/P100K	C178-.1M	23
C507	4 μF	100 V	MMy	14752	230B1B505	C245-4M	23
C508	22 μF	20 V	ETT	17554	TD1-20-226-20	C179-22M	23
C509	22 μF	20 V	ETT	17554	TD1-20-226-20	C179-22M	23
C510	.1 μF	250 V	MP*	73445	C280AE/P100K	C178-.1M	23
C511	.1 μF	250 V	MP*	73445	C280AE/P100K	C178-.1M	23
C512	.01 μF	500 V	CerD	56289	5GAS-S10	C22-.01M	23
C513	.01 μF	500 V	CerD	56289	5GAS-S10	C22-.01M	23
C514	500 pF	500 V	DM	14655	CD19FD501F03	C209-500P	23
C515	500 pF	500 V	DM	14655	CD19FD501F03	C209-500P	23

ANALOG BOARD (PC-303) (continued)

CAPACITORS (continued)

Circuit Desig.	Value	Rating	Type	Mfr. Code	Mfr. Desig.	Keithley Part No.	Fig. Ref.
C516	.1 μF	250 V	MP*	73445	C280AE/P100K	C178-.1M	23
C517	.01 μF	500 V	CerD	56289	5GAS-S10	C22-.01M	23
C518	.01 μF	500 V	CerD	56289	5GAS-S10	C22-.01M	23
C519	33 pF	1000V	CerD	72982	838-000-P3KO-330K	C64-33P	23
C520	10 μF	20 V	ETT	17554	TD12010620	C179-10M	23
C1001	100 pF	1000V	CerD	72982	838-000-Z5RO-101K	C64-100P	
C1002	100 pF	1000V	CerD	72982	838-000-Z5RO-101K	C64-100P	23
							23

*Metallized Polyethylemeterephtalate

DIODES

Circuit Desig.	Type	Mfr. Code	Mfr. Desig.	Keithley Part No.	Fig. Ref.
D501	Silicon	01295	1N645	RF-14	23
D502	Silicon	01295	1N645	RF-14	23
D503	Silicon, Zener, 6.2V, 0.25W	12954	1N709	DZ-21	23
D504	Silicon	01295	1N914	RF-28	23
D505	Silicon	01295	1N914	RF-28	23
D506	Silicon	01295	1N914	RF-28	23
D507	Silicon	01295	1N914	RF-28	23
D1001	Silicon, Zener, 9V, 0.5W	06751	1N937	DZ-41	23
D1002	Silicon	01295	1N914	RF-28	23
D1003	Silicon	01295	1N914	RF-28	23

INTEGRATED CIRCUITS

Circuit Desig.	Type	Mfr. Code	Mfr. Desig.	Keithley Part No.	Fig. Ref.
QA501	Operational Amplifier, 8-pin Mini-DIP	12040	SL12917	IC-24	23
QA502	Operational Amplifier, 8-pin Mini-DIP	12040	LM741CN	IC-42	23
QA503	Operational Amplifier, 8-pin Mini-DIP	12040	SL12917	IC-24	23
QA504	Operational Amplifier, TO-99 Case, 8-pin	12040	LM310H	IC-18	23
QA505	Operational Amplifier, 8-pin Mini-DIP	12040	LM741CN	IC-42	23
QA506	Synchronous Up/Down Counters, 16-pin DIP	18324	N74193B	IC-44	23
QA507	Dual Flip-Flop, 14-pin DIP	01295	SN7474N	IC-31	23
QA1001	Operational Amplifier, 8-pin Mini-DIP	80164	Selected	IC-76	23
QA1002	Operational Amplifier, 8-pin Mini-DIP	80164	Selected	IC-76	23

RESISTORS

Circuit Desig.	Value	Rating	Type	Mfr. Code	Mfr. Desig.	Keithley Part No.	Fig. Ref.
R501	100 kΩ	1%, 1/8 W	MtF	75042	CEA-T-O	R88-100K	23
R502	768 Ω	1%, 1/8 W	MtF	75042	CEA-T-O	R88-768	23
R503	768 Ω	1%, 1/8 W	MtF	75042	CEA-T-O	R88-768	23
R504	100 kΩ	1%, 1/8 W	MtF	75042	CEA-T-O	R88-100K	23
R505	30.1 kΩ	1%, 1/8 W	MtF	75042	CEA-T-O	R88-30.1K	23
R506	10 kΩ	10%, 0.75W	Cermet VAR	73138	89P-10K	RP89-10K	23
R507	10^8 Ω	20%, 1/2W	Comp	75042	GBT1/2-10^8	R37-10^8	23

ANALOG BOARD (PC-303) (continued)

RESISTORS (continued)

Circuit Desig.	Value	Rating	Type	Mfr. Code	Mfr. Desig.	Keithley Part No	Fig. Ref.
R508	10^8 Ω	20%, 1/2 W	Comp	75042	GBT1/2-10^8	R37-10^8	23
R509	2.2 kΩ	10%, 1/4 W	Comp	01121	CB222-10%	R76-2.2K	23
R510	10 kΩ	10%, 1/4 W	Comp	01121	CB103-10%	R76-10K	23
R511	10 kΩ	10%, 1/4 W	Comp	01121	CB103-10%	R76-10K	23
R512	10 MΩ	10%, 1/4 W	Comp	01121	CB106-10%	R76-10M	23
R513	10 kΩ	10%, 1/4 W	Comp	01121	CB103-10%	R76-10K	23
R514	499 kΩ	1%, 1/8 W	MtF	75042	CEA-T-O	R88-499K	23
R515	39.2kΩ	1%, 1/8 W	MtF	75042	CEA-T-O	R88-39.2K	23
R516	10 MΩ	10%, 1/2 W	Comp	01121	EB106-10%	R1-10M	23
R517	32.4kΩ	1%, 1/8 W	MtF	75042	CEA-T-O	R88-32.4K	23
R518	4.99kΩ	1%, 1/8 W	MtF	75042	CEA-T-O	R88-4.99K	23
R519	100 kΩ	10%, 1/4 W	Comp	01121	CB104-10%	R76-100K	23
R520	20 Ω	10%, 0.75W	Cermet Var	73138	89P-20	RP89-20	23
R521	Not Used	---	--	---	---	---	--
R522	29630Ω	0.1%	--	80164	Special	TF-21	23
R523	2690 Ω	0.1%	--	---	---	---	--
R524	300 Ω	0.1%	--	---	---	---	--
R525	300 Ω	0.1%	--	---	---	---	--
R526	50 kΩ	10%, 0.75W	Cermet Var	73138	89P-50K	RP89-50K	23
R527	1 kΩ	10%, 0.75W	Cermet Var	73138	89P-1K	RP89-1K	23
R528	200 kΩ	1%, 1/8 W	MtF	75042	CEA-T-O	R88-200K	23
R529	200 kΩ	1%, 1/8 W	MtF	75042	CEA-T-O	R88-200K	23
R530	15 kΩ	1%, 1/8 W	MtF	75042	CEA-T-O	R88-15K	23
R531	20 kΩ	1%, 1/8 W	MtF	75042	CEA-T-O	R88-20K	23
R532	100 kΩ	10%, 1/4 W	Comp	01121	CB104-10%	R76-100K	23
R533	100 kΩ	1%, 1/8 W	MtF	75042	CEA-T-O	R88-100K	23
R534	2.2 kΩ	10%, 1/4 W	Comp	01121	CB222-10%	R76-2.2K	23
R535	100 kΩ	10%, 0.75W	Cermet Var	73138	89P-100K	RP89-100K	23
R536	2.2 kΩ	10%, 1/4 W	Comp	01121	CB222-10%	R76-2.2K	23
R537	4.99kΩ	1%, 1/8 W	MtF	75042	CEA-T-O	R88-4.99K	23
R538	220 kΩ	10%, 1/4 W	Comp	01121	CB224-10%	R76-220K	23
R539	30.1kΩ	1%, 1/8 W	MtF	75042	CEA-T-O	R88-30.1K	23
R540	200 Ω	10%, 0.75W	Cermet Var	73138	89P-200	RP89-200	23
R1001	681 Ω	1%, 1/8 W	MtF	75042	CEA-T-O	R88-681	23
R1002	7150 Ω	0.1%, 0.3W	MtF	18612	V53-3-7150	R218-7150	23
R1003	2 kΩ	10%, 0.75W	Cermet Var	73138	89P-2K	RP89-2K	23
R1004	100 Ω	10%, 0.75W	Cermet Var	73138	89P-100	RP89-100	23
R1005	3.8 kΩ	0.01%, 0.3W	Fixed	18612	V53-1-3.8K	R184-3.8K	23
R1006	3.8 kΩ	0.01%, 0.3W	Fixed	18612	V53-1-3.8K	R184-3.8K	23
R1007	50 Ω	10%, 0.75W	Cermet Var	73138	89P-50	RP89-50	23
R1008	75 Ω	1%, 1/8 W	MtF	75042	CEA-T-O	R88-75	23
R1009	1 kΩ	0.1%, 0.3W	MtF	18612	V53-3-1K	R218-1K	23

*Resistor network; order Part No. TF-21 to replace R522, R523, R524, and R525.

TRANSISTORS

Circuit Desig.	Type	Mfr. Code	Mfr. Desig.	Keithley Part No.	Fig. Ref.
Q501	Silicon, P-Channel, MOS FET, TO-18 Case	97933	RN-1030	TG-51	23
Q502	Silicon, P-Channel, MOS FET, TO-18 Case	97933	RN-1030	TG-51	23
Q503	Silicon, N-Channel, J-FET, TO-92 Case	80164	Selected	25083A	23
Q504	Silicon, N-Channel, J-FET, TO-92 Case	80164	Selected	25083A	23
Q505	Silicon, N-Channel, J-FET, TO-92 Case	04713	2N5457	TG-41	23

ANALOG BOARD (PC-303) (continued)

TRANSISTORS (continued)

Circuit Desig.	Type	Mfr. Code	Mfr. Desig.	Keithley Part No.	Fig. Ref.
Q506	Silicon, PNP, Amplifier, TO-92 Case	04713	2N5087	TG-61	23
Q507	Silicon, NPN, Amplifier, TO-92 Case	04713	2N5089	TG-62	23
Q508	Silicon, NPN, Amplifier, TO-92 Case	04713	2N5089	TG-62	23

SWITCH BOARD, "600", "900", "1000", "1100" SERIES (PC-304)

Circuit Desig.	Value	Rating	Type	Mfr. Code	Mfr. Desig.	Keithley Part No.	Fig. Ref.
C601	Not Used	---	--	--	---	---	--
C602	.0033 µF	50 V	EPoly	Packtron	MW-400	C234-.0033M	27
C603	5 pF	500 V	DM	14655	CD10CD050D03	C231-5P	27
C604	2 pF	500 V	DM	14655	CD10CD020D03	C231-2P	27
C605	2 pF	1500V	DM	14655	CD19CH020D03	C242-2P	27
C606	Not Used	---	--	--	---	---	--
C607	150 pF	1000V	CerD	71590	DD-151	C64-150P	27
C608	100 pF	500 V	DM	14655	CD10FD101F03	C209-100P	27
C901	See FRONT PANEL, "900" SERIES						
C902	See MOTHER BOARD, "900" SERIES						
C903	.047 µF	200 V	MPoly	97419	M2W-R	C143-.047M	27
C904	.0033 µF	500 V	Poly	71590	CPR-3300J	C138-.0033M	27
C905	.0022 µF	500 V	CerD	72982	831-Z5UO-222M	C22-.0022M	27
C906	.01 µF	500 V	CerD	72982	871-Z5UO-103M	C22-.01M	27
C1101	22 µF	20 V	ETT	17554	TD1-20-226-20	C179-22M	27
C1102	.47 µF	20 V	ETT	17554	TD1-20-474-20	C179-.47M	27
C1103	.22 µF	35 V	ETT	17554	TD1-035-224-20	C179-.22M	27
C1104	390 pF	1000V	CerD	71590	DD-391	C64-390P	27
C1105	.001 µF	1000V	CerD	72982	808-000-Z5RO-102K	C64-.001M	27
C1106	2 µF	100 V	MMy	14752	230B1B205	C250-2M	27
C1107	.1 µF	250 V	MP*	73445	C280AE/P100K	C178-.1M	27
C1108	.1 µF	250 V	MP*	73445	C280AE/P100K	C178-.1M	27
C1109	.001 µF	1000V	CerD	72982	808-000-Z5RO-102K	C64-.001M	27
C1110	10 µF	20 V	ETT	17554	TD2-20-106-20	C179-10M	27
C1111	.001 µF	1000V	CerD	72982	808-000-Z5RO-102K	C64-.001M	27
C1112	10 µF	20 V	ETT	17554	TD2-20-106-20	C179-10M	27
C1113	22 µF	20 V	ETT	17554	TD1-20-226-20	C179-22M	27
C1114	.0047 µF	1000V	CerD	56289	10SS-D47	C64-.0047M	27
**C1115	120 pF	1000V	CerD	71590	DD-121	C64-120P	27

*Metallized Polyethylemeterephtalate.

**Nominal Value.

SWITCH BOARD, (PC-304) (continued)

DIODES

Circuit Desig.	Type	Mfr. Code	Mfr. Desig.	Keithley Part No.	Fig. Ref.
D601	Silicon	01295	1N914	RF-28	27
D602	Silicon	01295	1N914	RF-28	27
D901-904	See MOTHER BOARD, "900" SERIES				
D905	Silicon	04713	MR1032B	RF-40	27
D906	Silicon	04713	MR1032B	RF-40	27
D907	Silicon	04713	MR1032B	RF-40	27
D908	Silicon	04713	MR1032B	RF-40	27
D1101	Silicon	01295	1N914	RF-28	27
D1102	Silicon	01295	1N914	RF-28	27

INTEGRATED CIRCUITS

Circuit Desig.	Type	Mfr. Code	Mfr. Desig.	Keithley Part No.	Fig. Ref.
QA601	Operational Amplifier, 8-pin Mini-DIP	12040	SL12917	IC-24	27
QA1101	Operational Amplifier, TO-100 Case, 8-pin	07263	μA715C	IC-26	27

MISCELLANEOUS

Circuit Desig.	Type	Mfr. Code	Mfr. Desig.	Keithley Part No.	Fig. Ref.
S901	Not Used	--	--	--	--
S902	Switch, Rotary, RANGE, without components	80164	--	SW-347	27
J1101	Connector, 5-pin	22526	65039-040	CS-251	27
--	Connector, Mini, Female, Insert in CS-251	22526	47439	CS-236	27

RESISTORS

Circuit Desig.	Value	Rating	Type	Mfr. Code	Mfr. Desig.	Keithley Part No.	Fig. Ref.
R601	Not Used	---	---	---	---	---	--
R602	1 kΩ	0.02%, 0.3W	Fixed	18612	V53-1-1K	R183-1K	27
R603	10 kΩ	0.02%, 0.3W	Fixed	18612	V53-1-10K	R183-10K	27
R604	100kΩ	0.02%, 0.5W	Fixed	18612	V53-5-100K	R182-100K	27
R605	989kΩ	1%, 2 W	MtF	03888	PME-80-989K	R217-989K	27
R606	25 kΩ	10%, 0.75 W	Cermet Var	73138	89P-25K	RP89-25K	27
R607	Not Used	---	---	---	---	---	--
R608	500	10%, 0.75 W	Cermet Var	73138	89P-500	RP89-500	27
R609	5 kΩ	10%, 0.75 W	Cermet Var	73138	89P-5K	RP89-5K	27
R610	5 kΩ	10%, 0.75 W	Cermet Var	73138	89P-5K	RP89-5K	27
R901	See MOTHER BOARD, "900" SERIES						
R902	See MOTHER BOARD, "900" SERIES						
R903	Not Used	---	---	---	---	---	--
R904	Not Used	---	---	---	---	---	--
*R905	9 MΩ	0.1%, 2 W	---	80164	Matched	R186-9M	27
R906	10 kΩ	10%, 0.75 W	Cermet Var	73138	89P-10K	RP89-10K	27
*R907	895kΩ	0.1%, 1/4 W	---	80164	Matched	R186-895K	27
R908	1 kΩ	10%, 0.75 W	Cermet Var	73138	89P-1K	RP89-1K	27
*R909	89.5kΩ	0.1%, 1/4 W	---	80164	Matched	R186-89.5K	27
R910	100 Ω	10%, 0.75 W	Cermet Var	73138	89P-100	RP89-100	27

SWITCH BOARD (PC-304) (continued)

RESISTORS (continued)

Circuit Desig.	Value	Rating	Type	Mfr. Code	Mfr. Desig.	Keithley Part No.	Fig. Ref.
*R911	9.95 kΩ	0.1%, 1/4 W	--	80164	Matched	R186-9.95K	27
R912	100 MΩ	0.5%, 2 W	Fixed	00327	M14-100M	R189-100M	27
R913	12.1 Ω	1%, 1/8 W	MtF	91637	MFF-1/8	R88-12.1	27
R914	50 Ω	10%, 0.75 W	Cermet Var	73138	89P-50	RP89-50	27
R915	.1005 Ω	0.1%, 5 W	Fixed	01686	R185-.1005	R185-.1005	27
R916	100 Ω	1%, 1/8 W	MtF	75042	CEA-T-0	R88-100	27
R917	200 Ω	10%, 0.75 W	Cermet Var	73138	89P-200	RP89-200	27
R918	1.005 Ω	0.1%, 5 W	Fixed	01686	R185-1.005	R185-1.005	27
R919	10 Ω	0.02%, 5 W	Fixed	01686	R188-10	R188-10	27
R920	100 Ω	0.02%, 0.3W	Fixed	18612	V53-1-100	R183-100	27
R921	1 kΩ	0.02%, 0.3W	Fixed	18612	V53-1-1K	R183-1K	27
R922	10 kΩ	0.02%, 0.3W	Fixed	18612	V53-1-10K	R183-10K	27
R923	100 kΩ	0.02%, 0.5W	Fixed	18612	V53-5-100K	R182-100K	27
R1001-1009	See ANALOG BOARD, "1000" SERIES						
R1010	38 kΩ	0.01%, 0.3W	Fixed	18612	V53-1-38K	R184-38K	27
R1011	3.8 kΩ	0.01%, 0.3W	Fixed	18612	V53-1-3.8K	R184-3.8K	27
R1012	2 kΩ	0.01%, 0.3W	Fixed	18612	V53-1-2K	R184-2K	27
R1013	3.8 kΩ	0.01%, 0.3W	Fixed	18612	V53-1-3.8K	R184-3.8K	27
R1101	150 kΩ	10%, 1/4 W	Comp	01121	CB154-10%	R76-150K	27
R1102	5 kΩ	10%, 0.75 W	Cermet Var	73138	89P-5K	RP89-5K	27
R1103	1 MΩ	10%, 1/4 W	Comp	01121	CB105-10%	R76-1M	27
R1104	4.75 kΩ	1%, 1/8 W	MtF	75042	CEA-T-0	R88-4.75K	27
R1105	4.75 kΩ	1%, 1/8 W	MtF	75042	CEA-T-0	R88-4.75K	27
R1106	6.98 kΩ	1%, 1/8 W	MtF	75042	CEA-T-0	R88-6.98K	27
R1107	28.7 kΩ	1%, 1/8 W	MtF	75042	CEA-T-0	R88-28.7K	27
R1108	28.7 kΩ	1%, 1/8 W	MtF	75042	CEA-T-0	R88-28.7K	27
R1109	133 kΩ	1%, 1/8 W	MtF	75042	CEA-T-0	R88-133K	27
R1110	50 kΩ	10%, 0.75 W	Cermet Var	73138	89P-50K	RP89-50K	27
R1111	4.02 kΩ	1%, 1/8 W	MtF	75042	CEA-T-0	R88-4.02K	27
R1112	180 kΩ	10%, 1/4 W	Comp	01121	CB184-10%	R76-180K	27
R1113	100 kΩ	10%, 1/4 W	Comp	01121	CB104-10%	R76-100K	27
R1114	47 kΩ	10%, 1/4 W	Comp	01121	CB473-10%	R76-47K	27
R1115	100 MΩ	20%, 1/2 W	Comp	75042	GBT1/2-10^8	R37-10^8	27
R1116	10 MΩ	10%, 1/4 W	Comp	01121	CB106-10%	R76-10M	27
R1117	100 MΩ	20%, 1/2 W	Comp	75042	GBT1/2-10^8	R37-10^8	27
R1118	1 kΩ	10%, 1/4 W	Comp	01121	CB102-10%	R76-1K	27
R1119	10 kΩ	10%, 0.75 W	Cermet Var	73138	89P-10K	RP89-10K	27
R1120	15 kΩ	10%, 1/4 W	Comp	01121	CB153-10%	R76-15K	27
R1121	10 Ω	10%, 1/4 W	Comp	01121	CB100-10%	R76-10	27
R1122	10 Ω	10%, 1/4 W	Comp	01121	CB100-10%	R76-10	27
R1123	8.06 kΩ	1%, 1/8 W	MtF	75042	CEA-T-0	R88-8.06K	27
R1124	47 kΩ	10%, 2 W	Comp	01121	HB473-10%	R3-47K	27

*Matched set of resistors; order Part No. R186. Must replace entire set, if one or more resistors need replacement. Recalibration required.

TRANSISTORS

Circuit Desig.	Type	Mfr. Code	Mfr. Desig.	Keithley Part No.	Fig. Ref.
Q1101	Silicon, N-Channel, J-FET, TO-72 Case	07263	2N4220	TG-42	27
Q1102	Silicon, N-Channel, J-FET, TO-92 Case	04713	2N5457	TG-41	27

MOTHER BOARD, "700", "900", "1200" SERIES (PC-305)

CAPACITORS

Circuit Desig.	Value	Rating	Type	Mfr. Code	Mfr. Desig.	Keithley Part No.	Fig. Ref.
C701	2000 μF	15 V	EAL	29309	JCN2000158P	C210-2000M	22
C702	Not Used	--	--	--	---	---	--
C703	200 μF	35 V	EAL	37942	MTV200N35PDN	C177-200M	22
C704	Not Used	--	--	--	---	---	--
C705	200 μF	35 V	EAL	37942	MTV200N35PDN	C177-200M	22
C706*	10 μF	350 V	EAL	MATSUSHITA	ECE-A350V10	C259-10M	22
C707	100 μF	15 V	EAL	29309	JC6100158P	C210-100M	22
C708	10 μF	20 V	ETT	17554	TD22010620	C179-10M	22
C709	10 μF	20 V	ETT	17554	TD22010620	C179-10M	22
C710	220 pF	1000V	CerD	71590	DD-221	C64-220P	22
C711	220 pF	1000V	CerD	71590	DD-221	C64-220P	22
C712	10 μF	20 V	ETT	17554	TD22010620	C179-10M	22
C713	10 μF	20 V	ETT	17554	TD22010620	C179-10M	22
C714	47 pF	1000V	CerD	71590	DD-470	C64-47P	22
C715	47 pF	1000V	CerD	71590	DD-470	C64-47P	22
C716	47 pF	1000V	CerD	71590	DD-470	C64-47P	22
C717	47 pF	1000V	CerD	71590	DD-470	C64-47P	22
C718	.047 μF	600 V	MPoly	97419	M2W-F	C220-.047M	22
C719	.47 μF	600 V	MPoly	97419	M2W-F	C220-.47M	22
C901	See FRONT PANEL, "900" SERIES						
C902	.1 μF	1200V	My	97419	M2W-F	C244-.1M	22

*The replaced capacitor C173-15M (15μF, 300V) may be used as an alternate

DIODES

Circuit Desig.	Type	Mfr. Code	Mfr. Desig.	Keithley Part No.	Fig. Ref.
D701	Silicon	13327	1N4139	RF-34	22
D702	Silicon	13327	1N4139	RF-34	22
D703	Not Used	---	--	---	--
D704	Silicon, Full-Wave Bridge	83701	PD-10	RF-36	22
D705	Not Used	---	--	---	--
D706	Silicon, Full-Wave Bridge	83701	PD-10	RF-36	22
D707	Silicon	02735	1N3255	RF-17	22
D708	Germanium	15238	1N87	RF-39	22
D709	Germanium	15238	1N87	RF-39	22
D710	Germanium	15238	1N87	RF-39	22
D711	Germanium	15238	1N87	RF-39	22
D712	Germanium	15238	1N87	RF-39	22
D713	Germanium	15238	1N87	RF-39	22
D714	Germanium	15238	1N87	RF-39	22
D715	Germanium	15238	1N87	RF-39	22
D716	Silicon, Zener, 3-3.9V	01295	1N703	DZ-40	22
D717	Silicon, Zener, 3-3.9V	01295	1N703	DZ-40	22
D901	Silicon	04713	MR1032B	RF-40	22
D902	Silicon	04713	MR1032B	RF-40	22
D903	Silicon	04713	MR1032B	RF-40	22
D904	Silicon	04713	MR1032B	RF-40	22

MOTHER BOARD, (PC-305) (continued)

INTEGRATED CIRCUITS

Circuit Desig.	Type	Mfr. Code	Mfr. Desig.	Keithley Part No.	Fig. Ref.
QA701	See REAR PANEL, "700" SERIES				
QA702	Voltage Regulator, 14-pin DIP	12040	LM723CN	IC-25	22
QA703	Voltage Regulator, 14-pin DIP	12040	LM723CN	IC-25	22
QA704	Positive NAND Gates, 14-pin DIP	12040	DM7410N	IC-43	22

MISCELLANEOUS

Circuit Desig.	Type	Mfr. Code	Mfr. Desig.	Keithley Part No.	Fig. Ref.
F901	Fuse, 3AG, 250 V, 4 A	75915	312-004	FU-39	22
--	Fuse, 3AG, 250 V, 4 A, Spare for F901	75915	312-004	FU-39	22
--	Jumper	GETTIG ENGRG.	L-2007-2	J-3	22
J501	Connector, PC Mount, 15-contact (double sided)	71785	2521530160	CS-259	22
J705	Connector, 5-pin	22526	65039040	CS-251	22
J711	Connector, 5-pin	22526	65039040	CS-251	22
--	Connector, Mini, Female, Insert in CS251	22526	47439	CS-236	22
J901	Connector, PC Mount, 18-contact	71785	2521830240	CS-260	22
J902	Connector, PC Mount, 18-contact	71785	2521830240	CS-260	22
J1202	Connector, PC Mount, 22-contact (double sided)	71785	2522230160	CS-242	22
J1203	Connector PC Mount, 22-contact (double sided)	71785	2522230160	CS-242	22
S701	Switch, Slide, AC Line, 117V/234V, DPDT	79727	GG350PCDPDT	SW-318	22
S901	Not Used	---	---	---	--
S902	See SWITCH BOARD, "900" SERIES				
S903-907	Switch, Push Button, Front Section	80164	---	SW-345	22
S903-907	Switch, Push Button, Rear (Guarded) Section	80164	---	SW-349	22

RESISTORS

Circuit Desig.	Value	Rating	Type	Mfr. Code	Mfr. Desig.	Keithley Part No.	Fig. Ref.
R701	82 Ω	10%, 1/2 W	Comp	01121	EB820-10%	R1-82	22
R702	1 MΩ	10%, 1/4 W	Comp	01121	CB105-10%	R76-1M	22
R703	5.6 Ω	5%, 1/2 W	Comp	01121	EB56R-5%	R19-5.6	22
R704	634 Ω	1%, 1/8 W	MtF	75042	CEA-T-0	R88-634	22
R705	5.6 Ω	5%, 1/2 W	Comp	01121	EB56R-5%	R19-5.6	22
R706	634 Ω	1%, 1/8 W	MtF	75042	CEA-T-0	R88-634	22
R707	1.37kΩ	1%, 1/8 W	MtF	75042	CEA-T-0	R88-1.37K	22
R708	200 Ω	20%, 2 W	WWVar	71450	INS115200Ω	RP50-200	22
R709	1.1 kΩ	1%, 1/8 W	MtF	75042	CEA-T-0	R88-1.1K	22
R710	1.37kΩ	1%, 1/8 W	MtF	75042	CEA-T-0	R88-1.37K	22
R711	200 Ω	20%, 2 W	WWVar	71450	INS115200Ω	RP50-200	22
R712	1.1 kΩ	1%, 1/8 W	MtF	75042	CEA-T-0	R88-1.1K	22
R713	1.5 kΩ	10%, 1/4 W	Comp	01121	CB152-10%	R76-1.5K	22
R714	220 Ω	10%, 1/4 W	Comp	01121	CB221-10%	R76-220	22
R715	1.5 kΩ	10%, 1/4 W	Comp	01121	CB152-10%	R76-1.5K	22
R716	220 Ω	10%, 1/4 W	Comp	01121	CB221-10%	R76-220	22
R717	1.5 kΩ	10%, 1/4 W	Comp	01121	CB152-10%	R76-1.5K	22
R718	220 Ω	10%, 1/4 W	Comp	01121	CB221-10%	R76-220	22
R719	1.5 kΩ	10%, 1/4 W	Comp	01121	CB152-10%	R76-1.5K	22
R720	220 Ω	10%, 1/4 W	Comp	01121	CB221-10%	R76-220	22

MOTHER BOARD, (PC-305) (continued)

RESISTORS (continued)

Circuit Desig.	Value	Rating	Type	Mfr. Code	Mfr. Desig.	Keithley Part No.	Fig. Ref.
R721	47 kΩ	1%, 5 W	Fixed	48615	SM2812	R200-47K	22
R722	47 kΩ	1%, 5 W	Fixed	48615	SM2812	R200-47K	22
R723	500 Ω	10%, 0.75W	Cermet Var	73138	89P-500	RP96-500	22
R724	3.3 MΩ	1%, 1/2 W	DCb	91637	DCS-1/2	R12-3.3M	22
R725	20 Ω	1%, 1/8 W	MtF	91637	MFF-1/8	R88-20	22
R726	20 Ω	1%, 1/8 W	MtF	91637	MFF-1/8	R88-20	22
R727	20 Ω	1%, 1/8 W	MtF	91637	MFF-1/8	R88-20	22
R728	20 Ω	1%, 1/8 W	MtF	91637	MFF-1/8	R88-20	22
R729	20 Ω	1%, 1/8 W	MtF	91637	MFF-1/8	R88-20	22
R730	20 Ω	1%, 1/8 W	MtF	91637	MFF-1/8	R88-20	22
R731	3.3 MΩ	1%, 1/2 W	DCb	91637	DCS-1/2	R12-3.3M	22
R901	15 kΩ	10%, 1/4 W	Comp	01121	CB153-10%	R76-15K	22
R902	15 kΩ	10%, 1/4 W	Comp	01121	CB153-10%	R76-15K	22

TRANSISTORS

Circuit Desig.	Type	Mfr. Code	Mfr. Desig.	Keithley Part No.	Fig. Ref.
Q701	Silicon, Power, TO-66 Case	02735	40312	TG-54	22
Q702	Silicon, Power, TO-66 Case	02735	40312	TG-54	22
Q703	Silicon, NPN, TO-92 Case	04713	2N5551	TG-67	22
Q704	Silicon, NPN, TO-92 Case	04713	2N5551	TG-67	22
Q705	Silicon, NPN, TO-92 Case	04713	2N5551	TG-67	22
Q706	Silicon, NPN, TO-92 Case	04713	2N5551	TG-67	22

FUNCTION DISPLAY BOARD, "800" SERIES (PC-297)

Circuit Desig.	Type	Mfr. Code	Mfr. Desig.	Keithley Part No.	Fig. Ref.
DS801	Pilot Light, mA Display	05464	7361AS25	PL-57	Pg. 82
DS802	Pilot Light, NO RANGE Display	05464	7361AS25	PL-57	Pg. 82
DS803	Pilot Light, NO RANGE Display	05464	7361AS25	PL-57	Pg. 82
DS804	Pilot Light, MΩ Display	05464	7361AS25	PL-57	Pg. 82
DS805	Pilot Light, kΩ Display	05464	7361AS25	PL-57	Pg. 82
DS806	Pilot Light, AC Display	05464	7361AS25	PL-57	Pg. 82
DS807	Pilot Light, V Display	05464	7361AS25	PL-57	Pg. 82
DS808	Pilot Light, μA Display	05464	7361AS25	PL-57	Pg. 82
DS809	Pilot Light, mV Display	05464	7361AS25	PL-57	Pg. 82
J707	Connector, 10-pin	22526	65039-039	CS-237	Pg. 82
--	Connector, Mini, Female, Insert in CS237	22526	47439	CS-236	Pg. 82

FRONT PANEL, "700" & "900" SERIES

Circuit Desig.	Type	Mfr. Code	Mfr. Desig.	Keithley Part No.	Fig. Ref.
C901	Capacitor, 0.01 μF, 500V, CerD	56289	5GAS-S10	C22-.01M	Pg. 75
S701	See MOTHER BOARD, "700" SERIES				---
S702	Switch, Toggle, POWER, DPDT	ALCO	MST-205N	SW-271	2
J701	Connector, 5-pin	22526	65039-040	CS-251	Pg. 81
--	Connector, Mini, Female, Insert in CS251	22526	47439	CS-236	---
J906	Binding Post, Input, Red	58474	DF21-RC	BP-11R	2
J907	Binding Post, Input, Black	58474	DF21-BC	BP-11B	2
J908	Binding Post, Input, Green	58474	DF21-GC	BP-11G	2
--	Readout Block, Function Display (less lights)	80164	---	24876B	---
--	Window, Readout Block	80164	---	24886A	---
--	Shorting Link, Input	24655	938-L	BP-6	2

REAR PANEL, "500" & "700" SERIES

Circuit Desig.	Type	Mfr. Code	Mfr. Desig.	Keithley Part No.	Fig. Ref.
QA701	Integrated Circuit, Voltage Regulator, TO-3 Case	12040	LM309K	IC-98	Pg. 81
T701	Transformer, Power	80164	---	TR-141	Pg. 81
F701	Fuse, 3AG,125 Volt, Slo-Blo 1/2-amp (for 105-125 V Operation)	71400	MDL	FU-4	Pg. 81
--	Fuse, 3AG, 250 Volt, Slo-Blo 1/4-amp (for 210-250 V operation)	71400	MDL	FU-38	---
P706	Receptacle	82389	EAC-301	CS-254	Pg. 81
--	Line Cord, 3-pin	80164	---	CO-7	---
J501	See MOTHER BOARD, "500" SERIES				---
J502	Connector, Analog Output	02660	80PC2F	CS-32	3
--	Connector, Mate of J502 (not supplied)	02660	80MC2M	CS-33	---
J702	Connector, 5-pin	22526	65039-040	CS-251	Pg. 81
J703	Connector, 2-pin	22526	65039-035	CS-266	Pg. 81
J704	Connector, 10-pin	22526	65039-039	CS-237	Pg. 81
J709	Connector, 3-pin	22526	65039-034	CS-270	Pg. 81
J710	Connector, 2-pin	22526	65039-035	CS-266	Pg. 77
--	Connector, Mini, Female, Insert in CS251, CS-266, CS-237, CS-270	22526	47439	CS-236	---

6-7. MECHANICAL PARTS LIST. Table 6-5 is a list of replaceable mechanical parts for the Model 171 that are not listed elsewhere and include miscellaneous parts. It is recommended that these parts be obtained from Keithley Instruments.

TABLE 6-5.
Mechanical Parts List

Description	Quantity Required	Keithley Part No.
Cap, Plastic for POWER Switch S702	1	CAP-21
Cap, for Integrated Circuit QA701 (REAR PANEL)	1	CAP-20
Cable Clamp, for Readout-Block wiring harness	1	CC-27
Knob Assembly, for RANGE Switch S902	1	25151A
For RANGE Switch S-902 front shaft extension:		
Shaft, Switch, Extension	1	25141A
Coupling	1	CU-11
Bushing, Front Panel	1	BU-2
3/8" Lock Washer	1	--
3/8" Hex Nut	1	--
Washer, Spring	1	WA-9
Bushing	1	12869A
Plate, BCD Output Cover	1	24530A
Fuse Holder, for REAR PANEL Fuse F701	1	FH-11
Fuse Holder, for MOTHER BOARD (Fuse F-901)	2	FH-12
Push Buttons, Plastic, for S903 - S907 Front Section	5	PB-3
Push Buttons, for S903 - S907 Rear Section (Guarded)	5	24883A
Socket, for V201, V202, V203, V204 Digital Display Tube	4	SO-63
Socket, for QA210, QA213, QA216, QA219 Integrated Circuit	4	SO-65
Socket, for QA201 Integrated Circuit	1	SO-67
Socket, for QA601 Integrated Circuit	1	SO-72
Socket, for QA702, QA703, QA704 Integrated Circuits	3	SO-70
Heat Sink, for Q204 Transistor	1	HS-10
Heat Sink, for Q501/Q502 Transistors	1	HS-8
Lamp Bracket, for Overrange "1" Neon	2	24202B
Tube Clip, for Overrange "1" Neon	2	TC-26
Support Bracket Assembly, for RANGE Switch S902 and SWITCH BOARD PC-304	2	25707A
Card Guide, Support for ANALOG BOARD PC-303	2	CS-261
Shield Assembly, for PC-299/PC-300/PC-301	1	24885B

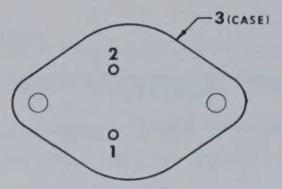

TO-3

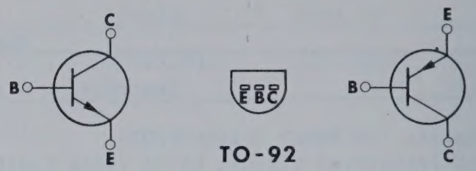

TO-92

BOTTOM VIEW

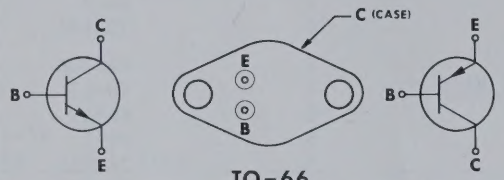

TO-66

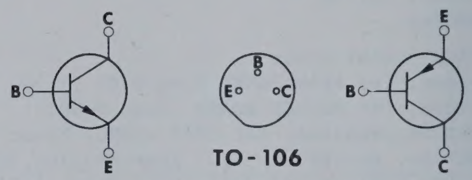

TO-106

BOTTOM VIEW

KEITHLEY PART NO. TG-41

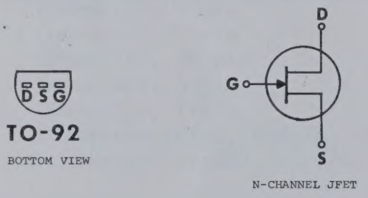

KEITHLEY PART NO. TG-42

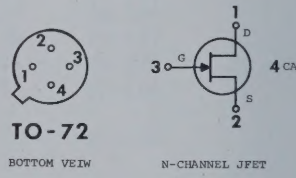

KEITHLEY PART NO. TG-51

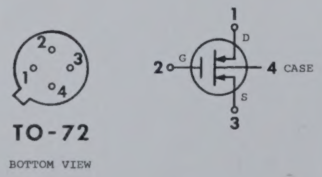

KEITHLEY PART NO. TG-52

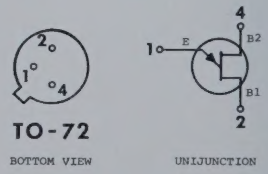

KEITHLEY PART NO. TG-74

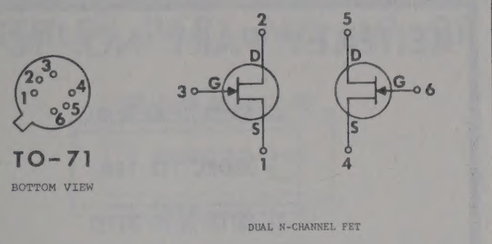

KEITHLEY PART NO. TG-76

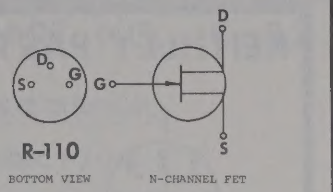

KEITHLEY PART NO. IC-18

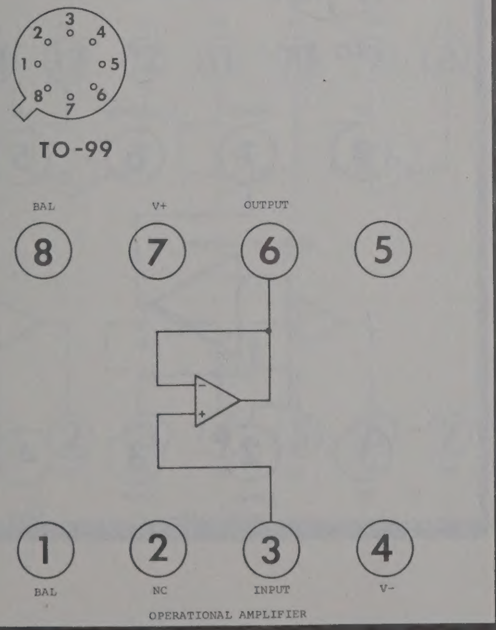

KEITHLEY PART NO. IC-26

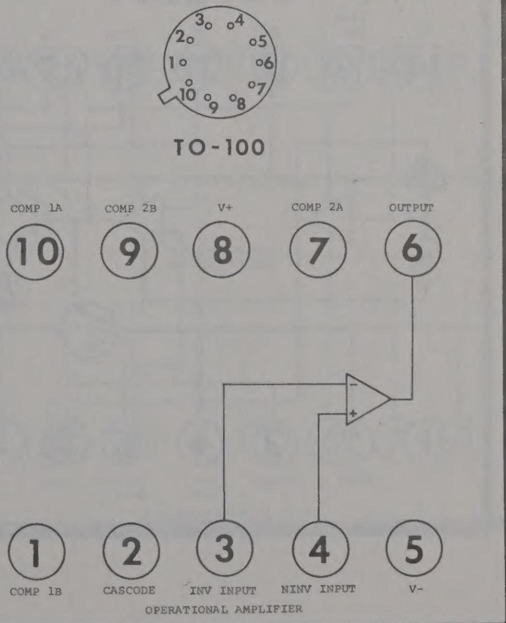

KEITHLEY PART NO. IC-2,24

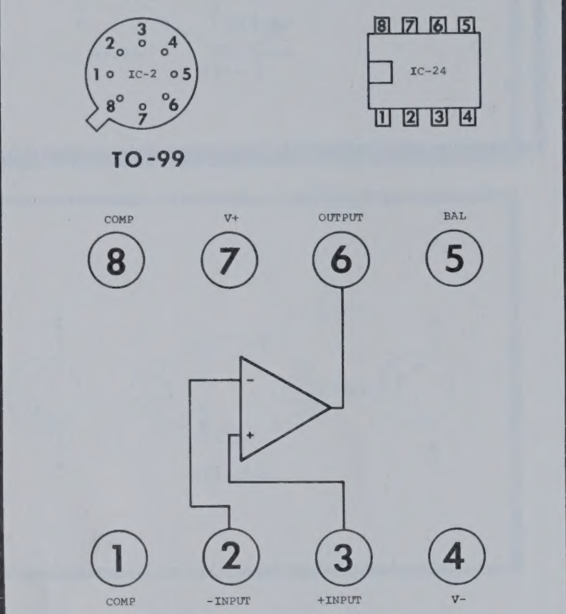

OPERATIONAL AMPLIFIER

KEITHLEY PART NO. IC-22

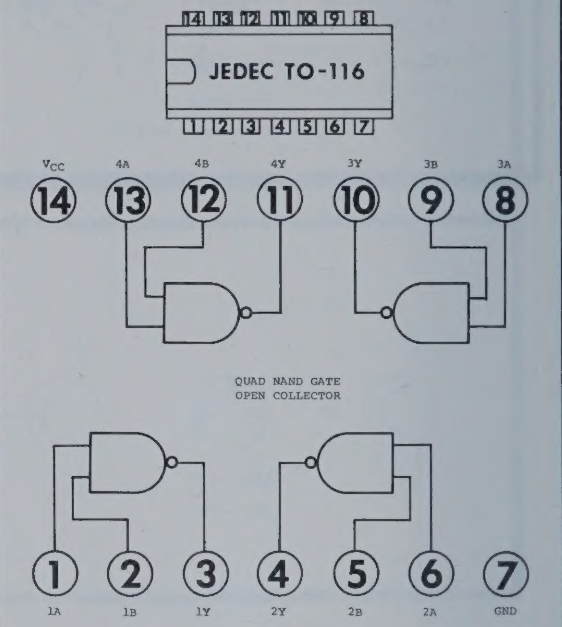

QUAD NAND GATE
OPEN COLLECTOR

KEITHLEY PART NO. IC-25

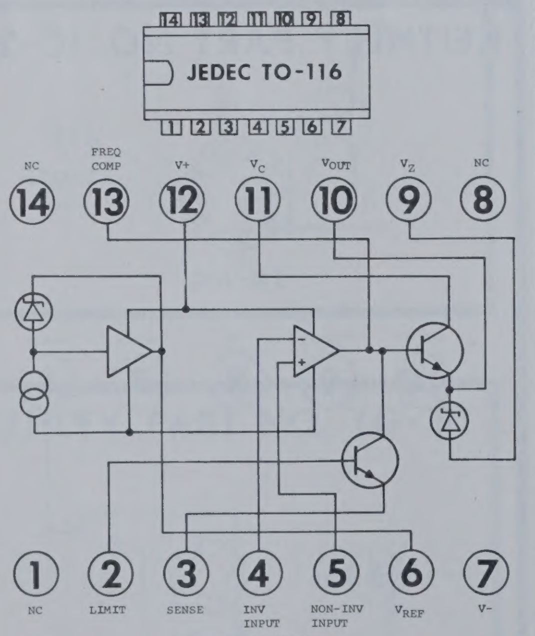

VOLTAGE REGULATOR

KEITHLEY PART NO. IC-29

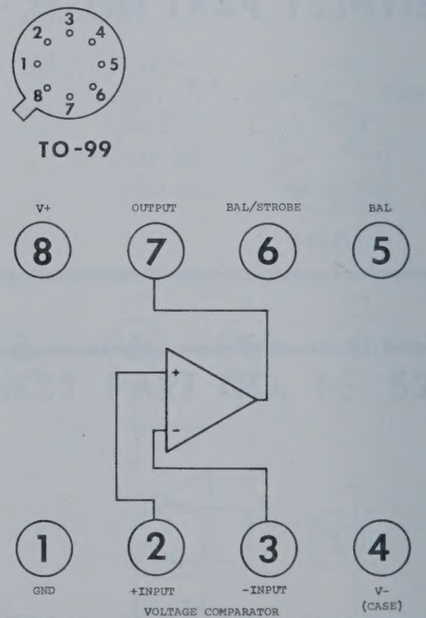

VOLTAGE COMPARATOR

KEITHLEY PART NO. IC-31

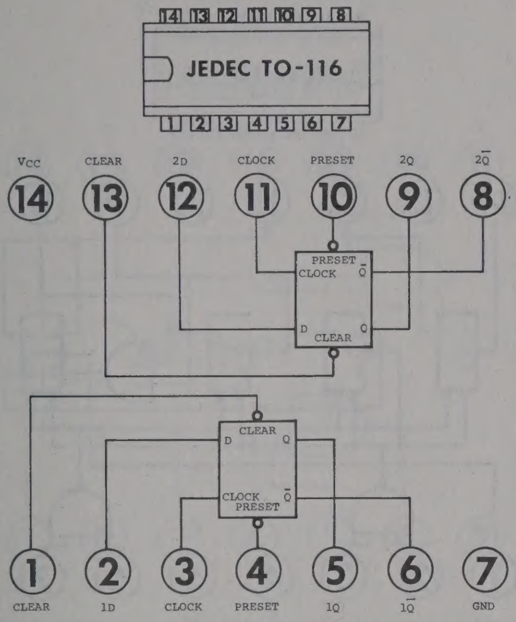

DUAL D-TYPE FLIP FLOPS

KEITHLEY PART NO. IC-32

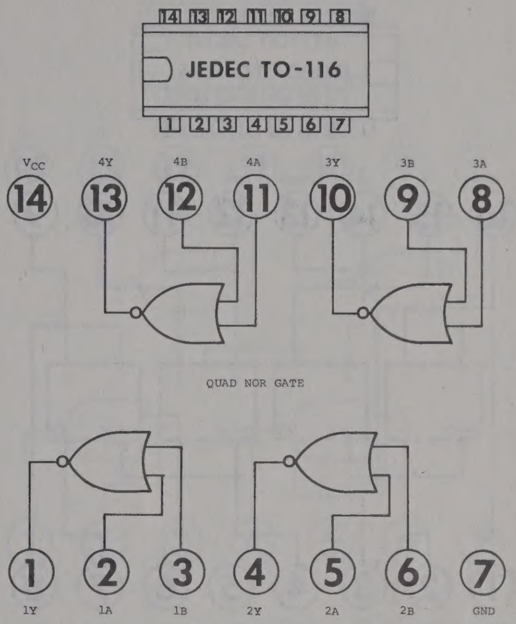

KEITHLEY PART NO. IC-33

IC-80
IC-81

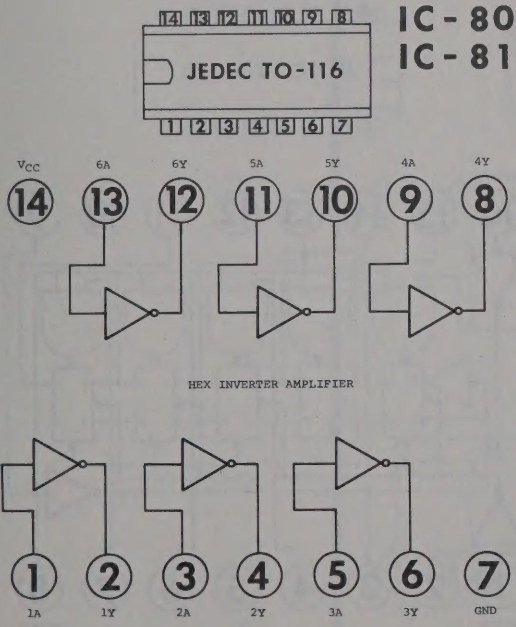

KEITHLEY PART NO. IC-35

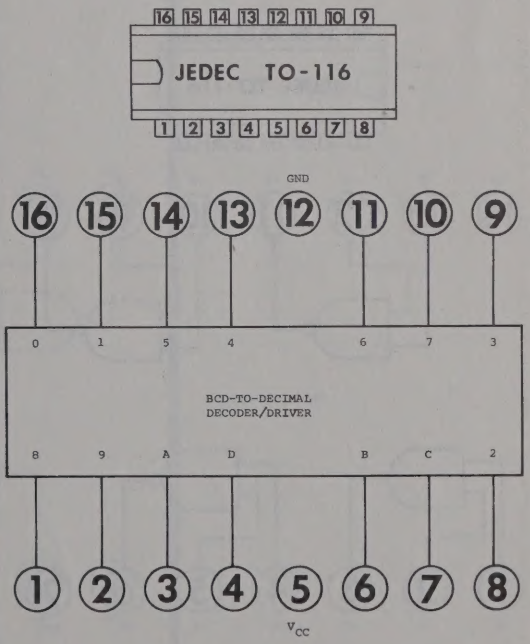

KEITHLEY PART NO. IC-36

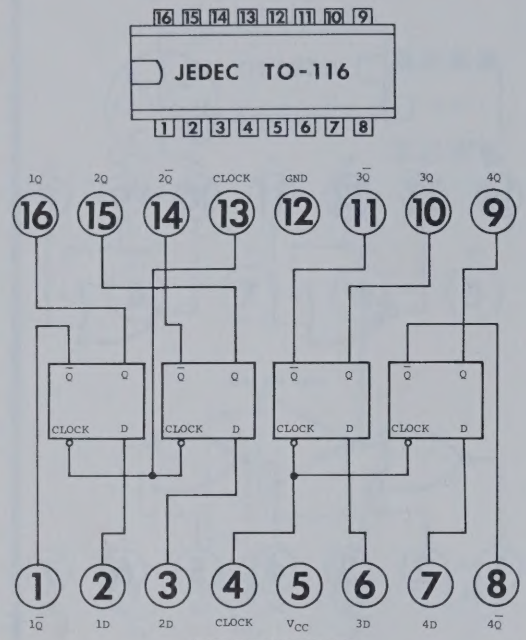

4-BIT BISTABLE LATCHES

KEITHLEY PART NO. IC-37

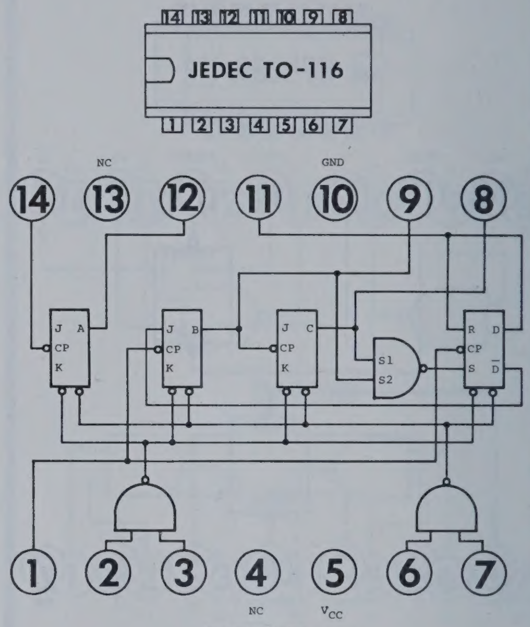

DECADE COUNTER

KEITHLEY PART NO. IC-38

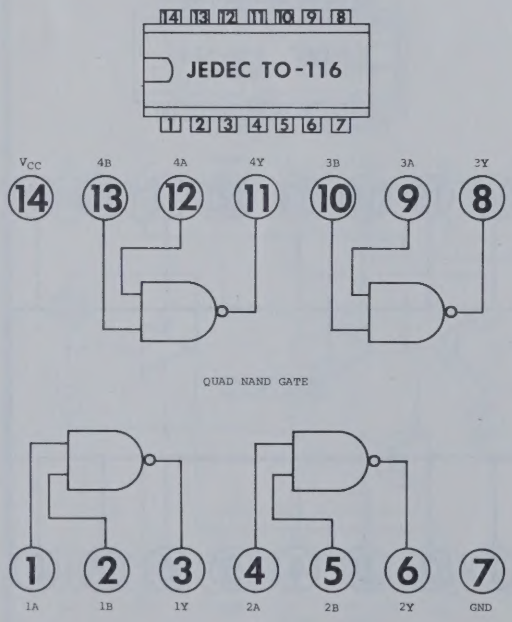

QUAD NAND GATE

KEITHLEY PART NO. IC-39

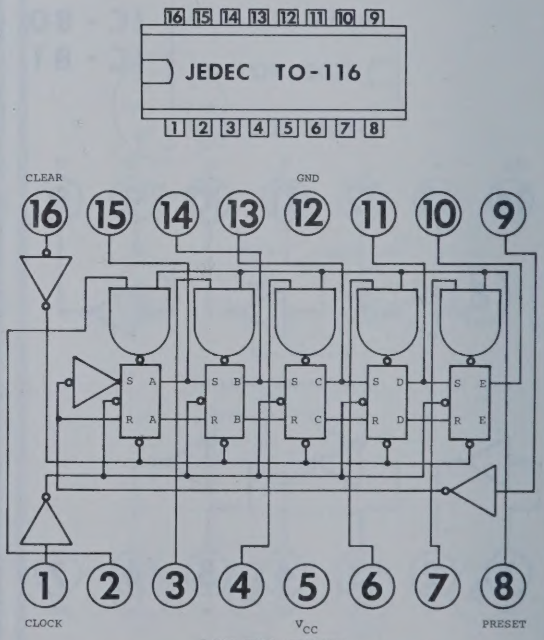

5 BIT SHIFT REGISTER

KEITHLEY PART NO. IC-43

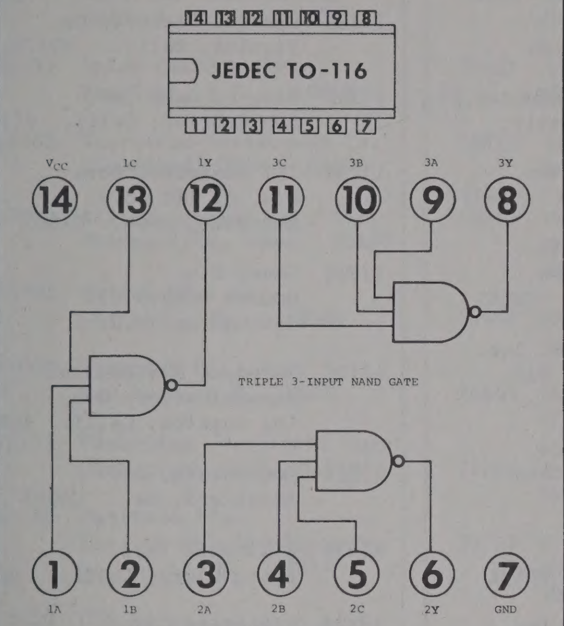

KEITHLEY PART NO. IC-47

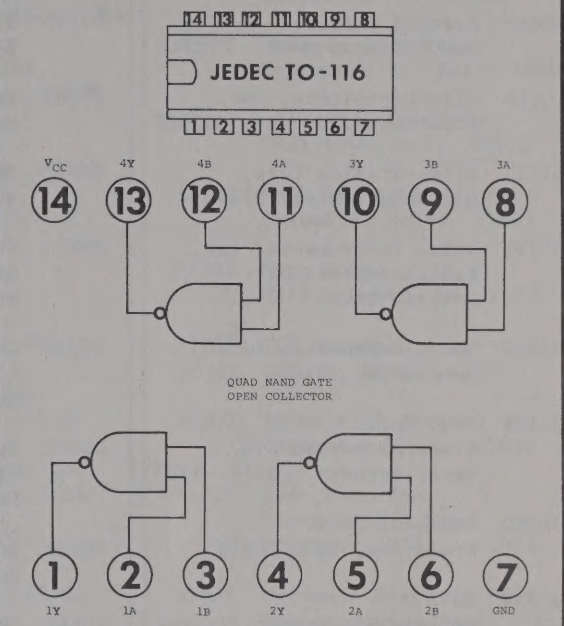

KEITHLEY PART NO. IC-48

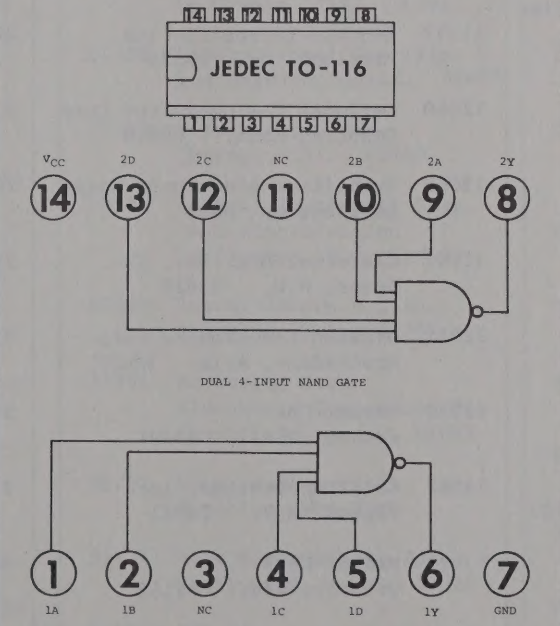

CODE—TO—NAME LIST

6-8. CODE TO NAME List of Suggested Manufacturers.
Reference: Federal Supply Code for Manufacturers, Cataloging Handbook H4-2.

Code	Manufacturer
00656	Aerovox Corp. New Bedford, Mass. 02745
00686	Film Capacitors, Inc. Passaic, N.J. 07055
01121	Allen-Bradley Corp. Milwaukee, Wisc. 53204
01295	Texas Instruments, Inc. Semiconductor Div. Dallas, Texas 75231
01686	RCL Electronics, Inc. Manchester, N.H. 03102
02101	Varo Inc. Electrokinetics Div. Santa Barbara, Calif. 93103
02660	Amphenol Corp. Broadview, Ill. 60153
02734	RCA Defense Electronic Products Moorestown, N.J. 08540
02735	RCA Solid State Div. Somerville, N.J. 08876
02777	Hopkins Engineering Co. San Fernando, Calif. 91342
02985	Tepro Electric Corp. Rochester, N.Y. 14606
03508	General Electric Co. Semiconductor Products Syracuse, N.Y. 13201
04009	Arrowhart, Inc. Hartford, Conn. 06106
04713	Motorola Semicon. Prod. Phoenix, Ariz. 85008
05079	Tansistor Electronics Bennington, Vt. 05201
05397	Union Carbide Corp. Materials Systems Div. Cleveland, Ohio 44101
06751	Components, Inc. Semcor Division Phoenix, Ariz. 85019
06980	Varian Eimac Division San Carlos, Calif. 94070
07137	TEC, Inc. Eden Prairie, Minn.
07263	Fairchild Semiconductor Div. Mountain View, Calif.
07716	IRC Div. of TRW Inc. Burlington, Iowa 52601
08811	GL Electronics Div. GL Industries, Inc. Westville, N.J. 08093
09052	Gulton Industries, Inc. Alkaline Battery Div. Metuchen, N.J.
09823	Burgess Battery Co. Div. of Clevite Corp. Freeport, Ill.
09922	Burndy Corp. Norwalk, Conn. 06852
10582	CTS of Asheville Inc. Skyland, N.C. 28776
11502	IRC Div. of TRW Inc. Boone, N.C. 28607
11534	Duncan Electronics, Inc. Costa Mesa, Calif. 92626
11837	Electro Scientific Ind. Portland, Or. 97229
12040	National Semiconductor Corp. Danbury, Conn. 06810
12065	Transitron Electronic Corp. East Boston, Mass.
12697	Clarostat Mfg. Co., Inc. Dover, N.H. 03820
12954	Dickson Electronics Corp. Scottsdale, Ariz. 85252
13050	Potter Co. Wesson, Miss. 39191
13327	Solitron Devices, Inc. Tappan, N.Y. 10983
13934	Midwec Corp. Oshkosh, Nebr. 69154
14655	CornellDubilier Elec. Div. Newark, N.J. 07105
56289	Sprague Electric Co. Visalia, Calif. 93278
14752	Electro Cube Inc. San Gabriel, Calif. 91776
15238	ITT Semiconductors Div. of ITT Corp. Lawrence, Mass. 01841
17870	Daven Div. McGraw Edison Co. Livingston, N.J.
16170	Teledyne Systems Co. Communications Div. Los Angeles, Calif. 90066
17554	Components, Inc. Biddeford, Ma. 04005
17896	Siliconix Inc. Santa Clara, Calif. 95054
18324	Signetics Corp. Sunnyvale, Calif. 94086
22526	Berg Electronics, Inc. New Cumberland, Pa. 17070
23020	General Reed Division Clark, N.J. 07066
24655	General Radio Co. West Concord, Mass. 01781
27682	Hathaway Instruments, Inc. Denver, Colorado 80222
28520	Heyman Mfg. Co. Kenilworth, N.J. 07033
29309	Richey Electronics Inc. Nashville, Tenn. 37213
32293	Intersil, Inc. Cupertino, Calif. 95014
35529	Leeds and Northrup Philadelphia, Pa. 19144
37942	Mallory, P. R. and Co. Indianapolis, Ind. 46206
44655	Ohmite Mfg. Co. Skokie, Ill. 60076
53021	Sangamo Electric Co. Springfield, Ill. 62705

54294 Shallcross Mfg. Co.
Selma, N.C. 27576

56289 Sprague Electric Co.
North Adams, Mass. 01247

58474 Superior Electric Co.
Bristol, Conn. 06010

61637 Union Carbide Corp.
New York, N.Y. 10017

63060 Victoreen Instrument Co.
Cleveland, Ohio 44104

02288 Allied Control Co., Inc.
Plantsville, Conn. 06479

70903 Belden Mfg. Co.
Chicago, Ill. 60644

71002 Birnbach Co., Inc.
New York, N.Y. 10014

71279 Cambridge Thermionic Corp.
Cambridge, Mass. 02138

71400 Bussmann Mfg.
Div. of McGraw-Edison Co.
St. Louis, Mo. 63017

71450 CTS Corp.
Elkhart, Ind. 46514

71468 ITT Cannon Electric, Inc.
Los Angeles, Calif. 90031

71590 Centralab
Div. of Globe-Union, Inc.
Milwaukee, Wisc. 53201

71785 Cinch Mfg. Co.
Howard B. Jones Div.
Chicago, Ill. 60624

72259 Nytronics, Inc.
Pelham Manor, N.Y. 10803

72619 Dialight Corp.
Brooklyn, N.Y. 11237

72653 G-C Electronics Co.
Rockford, Ill. 61101

72699 General Instrument Corp.
Capacitor Division
Newark, N.J. 07104

72982 Erie Technological Prods.
Erie, Pa. 16512

73138 Beckman Instruments, Inc.
Helipot Division
Fullerton, Calif. 92634

73445 Amperex Electronic Div.,
North American Philips Co.
Hicksville, N.Y.

73690 Elco Resistor Co.
New York, N.Y.

74276 Signalite Inc.
Neptune, N.J. 07753

74970 Johnson, E.F., Co.
Waseca, Minn. 56093

75042 IRC Div. of TRW Inc.
Philadelphia, Pa. 19108

75915 Littelfuse, Inc.
Des Plaines, Ill. 60016

76055 Mallory Controls Div.,
Mallory P. R. & Co., Inc.
Frankfort, Ind.

76493 Miller, J. W. Co.
Compton, Calif. 90024

76545 Mueller Electric Co.
Cleveland, Ohio 44114

77764 Resistance Products Co.
Harrisburgh, Pa. 17104

79727 Continental-Wirt
Electronics Corp.
Philadelphia, Pa. 19144

80164 Keithley Instruments, Inc.
Cleveland, Ohio 44139

80294 Bourns, Inc.
Riverside, Calif. 92507

81073 Grayhill, Inc.
La Grange, Ill. 60525

81483 International Rectifier
Los Angeles, Calif. 90069

82389 Switchcraft, Inc.
Chicago, Ill. 60630

83125 General Instrument Corp.
Capacitor Division
Darlington, S.C. 29532

83330 Smith, Herman H., Inc.
Brooklyn, N.Y. 11207

83594 Burroughs Corp.
Electronic Components Div.
Plainfield, N.J. 07061

83701 Electronic Devices, Inc.
Brooklyn, New York

84171 Arco Electronics, Inc.
Great Neck, N.Y. 11022

84411 TRW Capacitor Div.
Ogallala, Nebr.

84970 Sarkes Tarzian, Inc.
Bloomington, Ind.

86684 RCA
Electronic Components
Harrison, N.J. 07029

87216 Philco Ford Corp.
Lansdale Div.
Lansdale, Pa. 19446

90201 Mallory Capacitor
Indianapolis, Ind. 46206

90303 Mallory Battery Co.
Tarrytown, N.Y. 10591

91637 Dale Electronics, Inc.
Columbus, Nebr. 68601

91662 Elco Corp.
Willow Grove, Pa. 19090

91737 ITT Gremar, Inc.
Woburn, Mass. 01801

91802 Industrial Devices Inc.
Edgewater, N.J. 07020

91929 Honeywell Inc.
Micro Switch Div.
Freeport, Ill. 61032

93332 Sylvania Electric Prod.
Semiconductor Prod. Div.
Woburn, Mass. 01801

93656 Electric Cord Co.
Fairfield, N.J. 07006

94144 Raytheon Co., Industrial
Operation Components Div.
Quincy, Mass.

94154 Tung-Sol Electric, Inc.
Newark, New Jersey

94310 Memcor, Inc.
Components Division
Huntington, Ind. 46750

94696 Magnecraft Electric Co.
Chicago, Ill.

95263 Leecraft Mfg. Co., Inc.
L.I. City, N.Y. 11101

95348 Gordos Corp.
Bloomfield, N.J. 07003

95712 Dage Electric Co., Inc.
Franklin, Ind.

97419 Standard Condenser Co.
Chicago, Ill. 60613

97933 Raytheon Co. Components Div.
Semiconductor Operation
Mountain View, Calif.

99120 Plastic Capacitors, Inc.
Chicago, Ill.

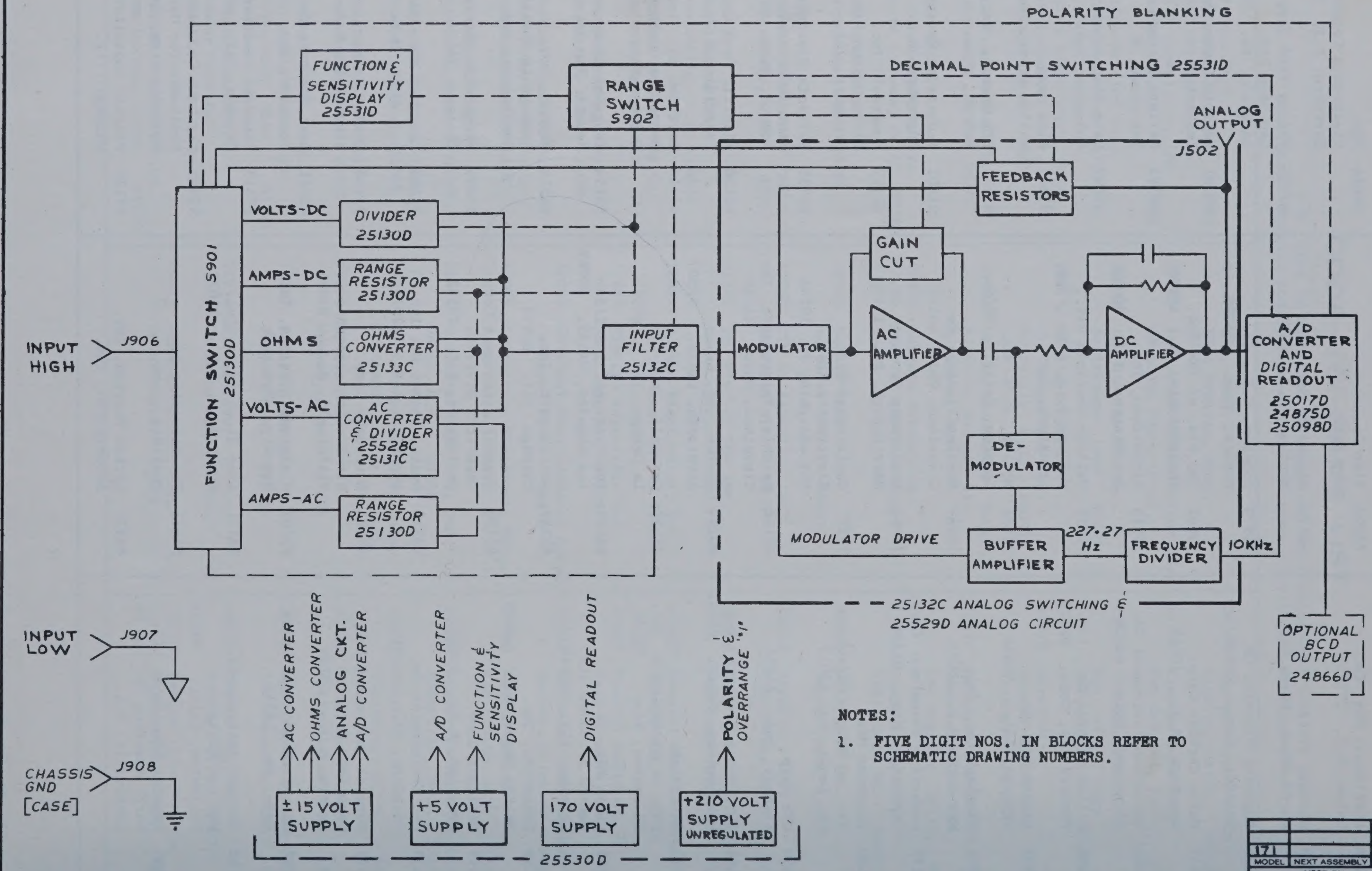

NOTES:

1. FIVE DIGIT NOS. IN BLOCKS REFER TO SCHEMATIC DRAWING NUMBERS.

LTR	ECO NO	REVISION	DATE

MODEL	NEXT ASSEMBLY	QTY
171		1

USED ON

DO NOT SCALE THIS DRAWING

KEITHLEY INSTRUMENTS CLEVELAND, OHIO

DIMENSIONAL TOLERANCES UNLESS OTHERWISE SPECIFIED
XX = ± .015 ANG = ±1°
XXX = ± .005 FRAC = ±1/64
SURFACE MAX 63

DATE 1-24-73 SCALE —
DRN RGJ ENG APPR Wan
MATERIAL
FINISH

TITLE BLOCK DIAGRAM, SCHEMATIC

NO 25532C

NO 25532C

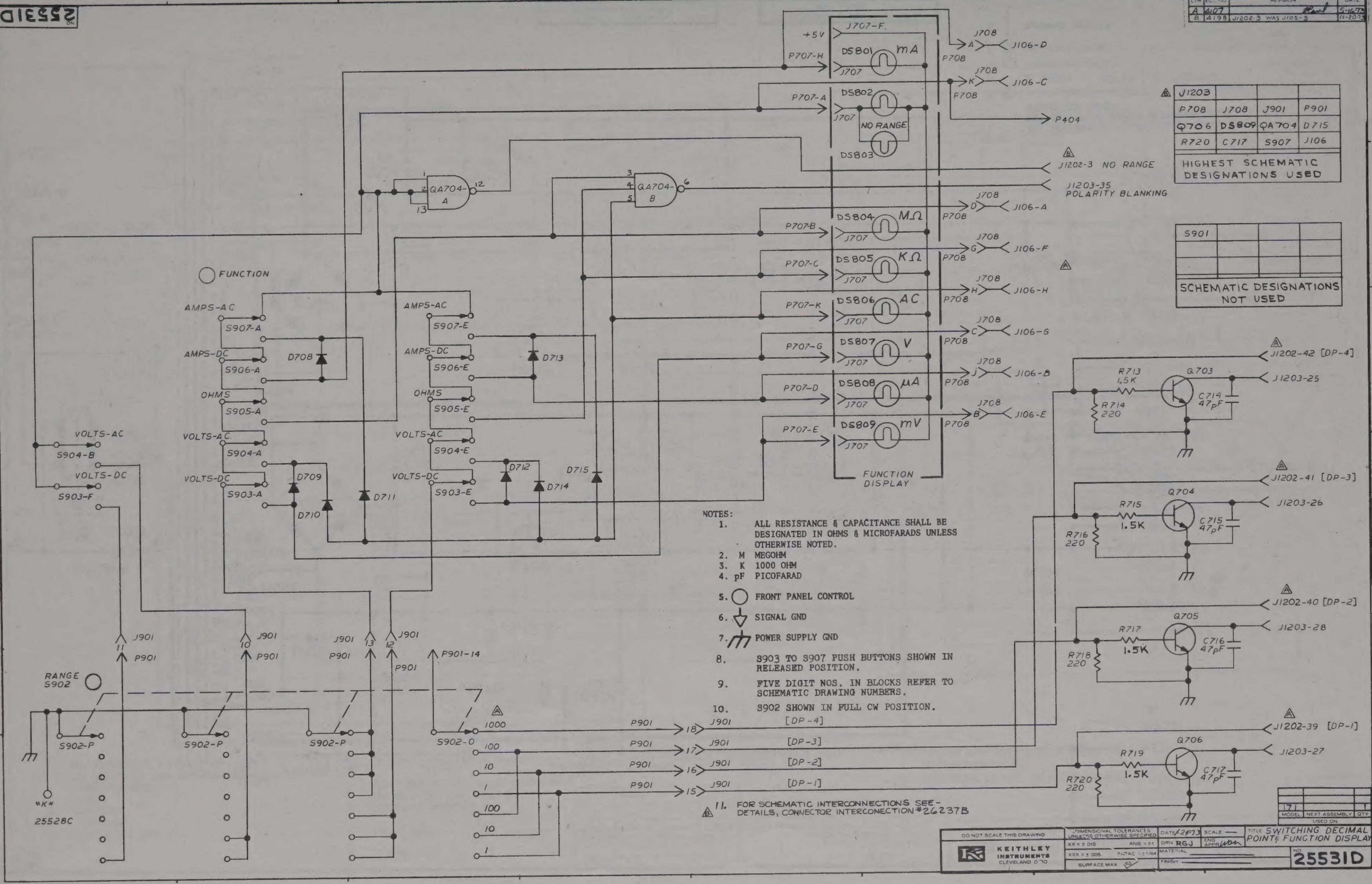

LTR	EC NO	REVISION	DATE
A	4107		5-16-73
B	4198	J1202-3 WAS J105-3	11-20-73

J1203			
P708	J708	J901	P901
Q706	DS809	QA704	D715
R720	C717	S907	J106
HIGHEST SCHEMATIC DESIGNATIONS USED			

S901			
SCHEMATIC DESIGNATIONS NOT USED			

NOTES:

1. ALL RESISTANCE & CAPACITANCE SHALL BE DESIGNATED IN OHMS & MICROFARADS UNLESS OTHERWISE NOTED.
2. M MEGOHM
3. K 1000 OHM
4. pF PICOFARAD
5. ◯ FRONT PANEL CONTROL
6. SIGNAL GND
7. POWER SUPPLY GND
8. S903 TO S907 PUSH BUTTONS SHOWN IN RELEASED POSITION.
9. FIVE DIGIT NOS. IN BLOCKS REFER TO SCHEMATIC DRAWING NUMBERS.
10. S902 SHOWN IN FULL CW POSITION.
11. FOR SCHEMATIC INTERCONNECTIONS SEE-DETAILS, CONNECTOR INTERCONECTION #26237B

DO NOT SCALE THIS DRAWING

KEITHLEY INSTRUMENTS CLEVELAND OHIO

DIMENSIONAL TOLERANCES UNLESS OTHERWISE SPECIFIED XX = ±.015 ANG = ±1 XXX = ±.005 FRAC = ±1/64 SURFACE MAX

DATE 2-8-73 SCALE — DRN RGJ ENG APPR

MATERIAL

FINISH

TITLE SWITCHING DECIMAL POINT & FUNCTION DISPLAY

171 MODEL | NEXT ASSEMBLY | QTY USED ON

NO. 25531D

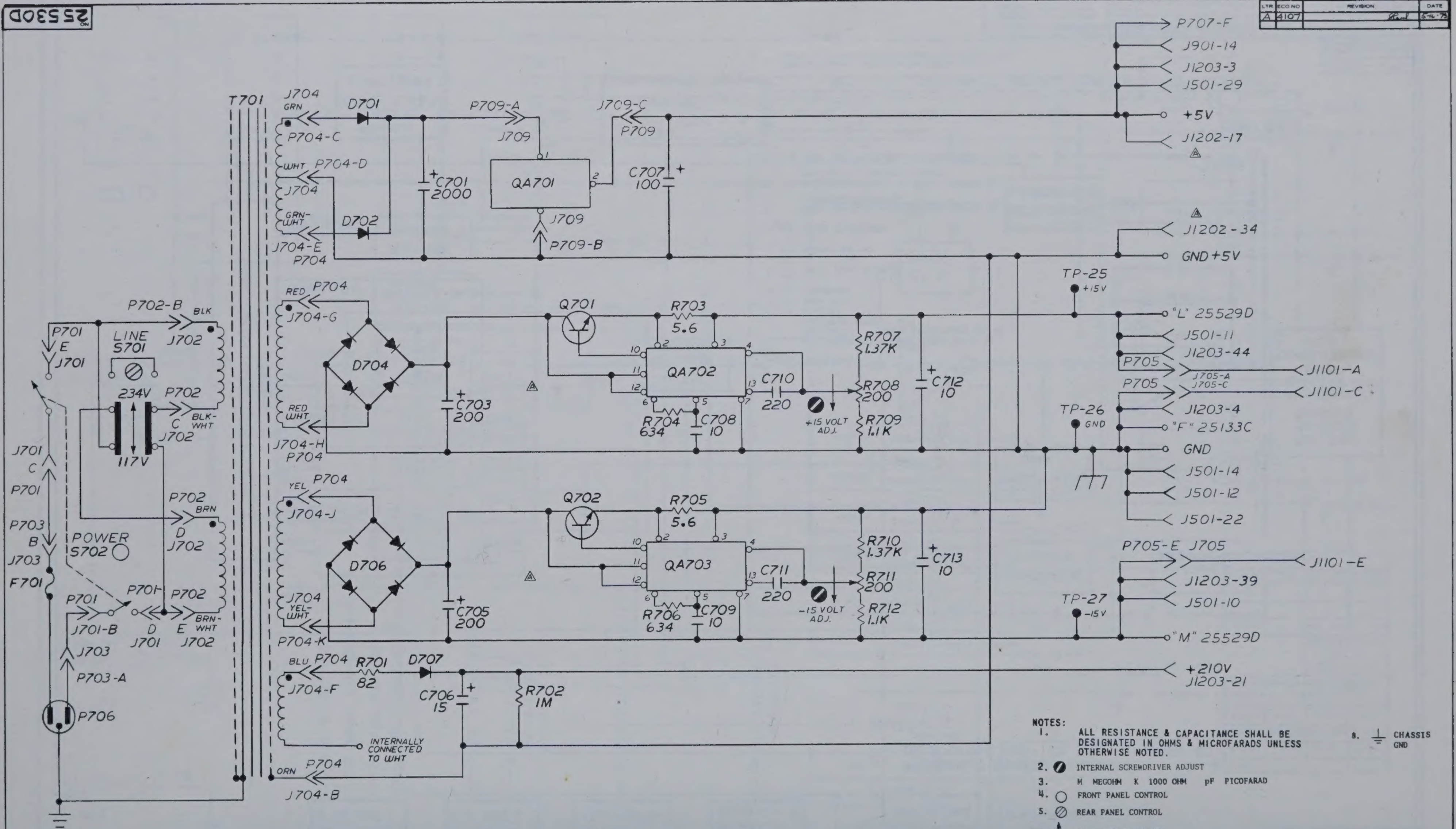

LTR	ECO NO	REVISION	DATE
A	4107		5-16-73

NOTES:

1. ALL RESISTANCE & CAPACITANCE SHALL BE DESIGNATED IN OHMS & MICROFARADS UNLESS OTHERWISE NOTED.
2. ⊘ INTERNAL SCREWDRIVER ADJUST
3. M MEGOHM K 1000 OHM pF PICOFARAD
4. ○ FRONT PANEL CONTROL
5. ⊘ REAR PANEL CONTROL
6. ↑ CLOCKWISE ROTATION
7. POWER SUPPLY GND
8. CHASSIS GND

HIGHEST SCHEMATIC DESIGNATIONS USED			
R712	C713		F701
P709	QA703	D707	T701
Q702	J709	J501	J901
J1203	J1101	S702	

SCHEMATIC DESIGNATIONS NOT USED			
D703			
D705			
C702			
C704			

DO NOT SCALE THIS DRAWING	
DIMENSIONAL TOLERANCES UNLESS OTHERWISE SPECIFIED	XX = ± .015 ANG. = ± 1° ; XXX = ± .005 FRAC. = ± 1/64 ; SURFACE MAX. 63
DATE 1-24-73	SCALE
DRN CWM	ENG APPR
MATERIAL	
FINISH	
TITLE	SCHEMATIC, POWER SUPPLY
MODEL	171
NEXT ASSEMBLY	
QTY	
USED ON	
NO	25530D

KEITHLEY INSTRUMENTS
CLEVELAND, OHIO

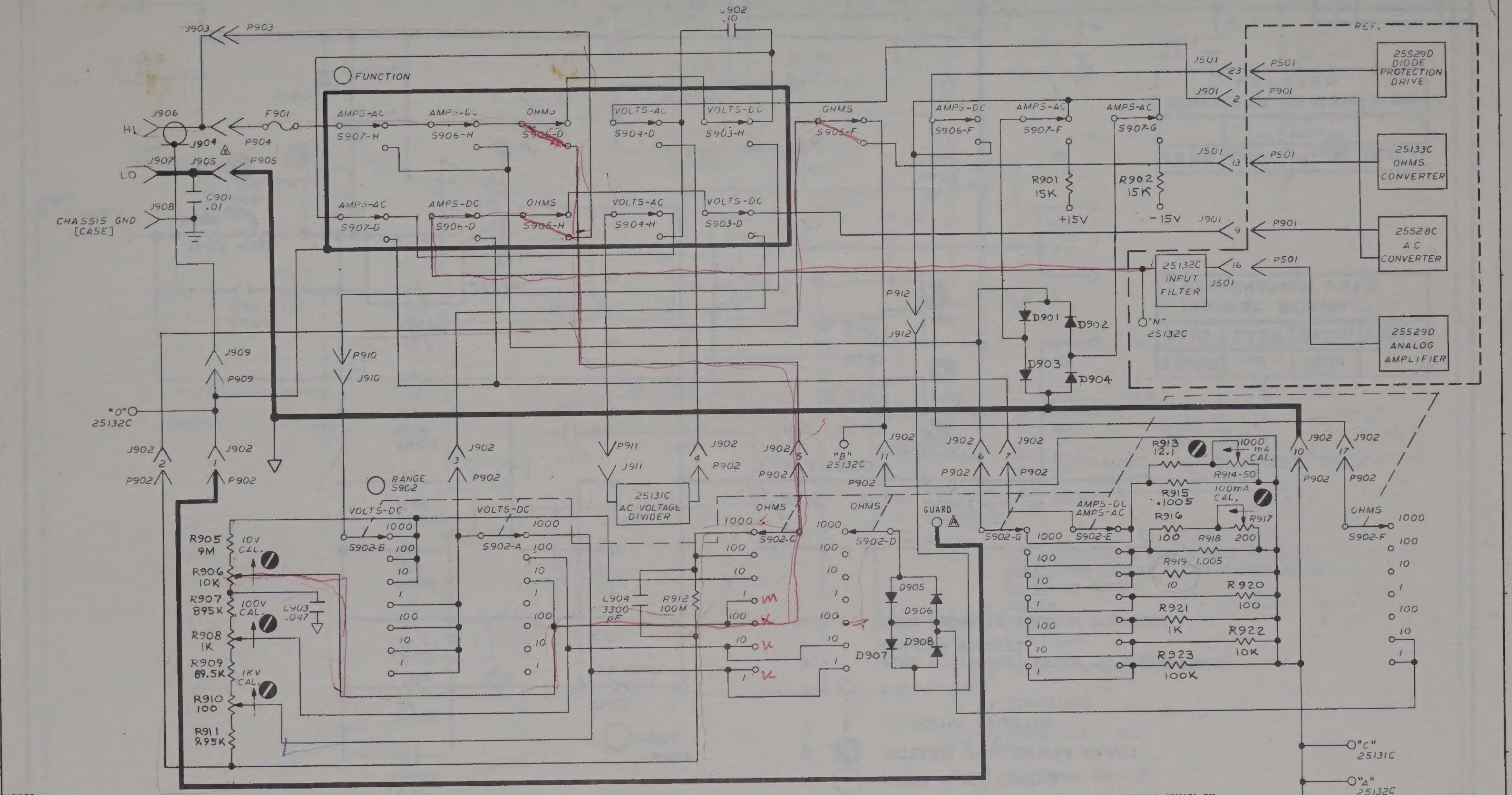

NOTES:

1. ALL RESISTANCE & CAPACITANCE SHALL BE DESIGNATED IN OHMS & MICROFARADS UNLESS OTHERWISE NOTED.
2. M MEGOHM
3. K 1000 OHM
4. pF PICOFARAD
5. ◯ FRONT PANEL CONTROL
6. INTERNAL SCREWDRIVER ADJUST
7. INDICATES NOMINAL VALUE DETERMINED DURING FINAL CALIBRATION
8. ↑ CLOCKWISE ROTATION
9. ▽ SIGNAL GND
10. ⏚ CHASSIS GND
11. FIVE DIGIT NOS. IN BLOCKS REFER TO SCHEMATIC DRAWING NUMBERS.
12. S903 TO S907 PUSH BUTTONS SHOWN IN RELEASED POSITION.
13. S902 SHOWN IN FULL CW POSITION.

J501	P501		
J912	P912	F901	
D908	R923	C904	S907

HIGHEST SCHEMATIC DESIGNATION USED

R903	R904	S901	

SCHEMATIC DESIGNATION NOT USED

LTR	ECO NO.	REVISION	DATE
A	4107		5-16-73
B	4198	J904 WAS 904 (B-2)	11-20-73

DO NOT SCALE THIS DRAWING — KEITHLEY INSTRUMENTS CLEVELAND, OHIO

DIMENSIONAL TOLERANCES UNLESS OTHERWISE SPECIFIED: XX = ± .015, XXX = ± .005, ANG. = ±1°, FRAC. = ±1/64, SURFACE MAX.

DATE 1-24-73 — SCALE — DRN RGJ — ENG APPR. WAY — MATERIAL — FINISH

TITLE SCHEMATIC, INPUT SWITCHING AND CURRENT/OHMS PROTECTION

MODEL 171 — NEXT ASSEMBLY — USED ON — QTY

NO. 25130D

NO. 25131C

LTR	ECO NO.	REVISION	DATE
A	4107	[signature]	5-16-73

NOTES:

1. ALL RESISTANCE & CAPACITANCE SHALL BE DESIGNATED IN OHMS & MICROFARADS UNLESS OTHERWISE NOTED.
2. M MEGOHM
3. K 1000 OHM
4. pF PICOFARAD
5. ◯ FRONT PANEL CONTROL
6. ⊘ INTERNAL SCREWDRIVER ADJUST
7. ↑ CLOCKWISE ROTATION
8. ▽ SIGNAL GND
9. FIVE DIGIT NOS. REFER TO SCHEMATIC DRAWING NUMBERS.
10. S902 SHOWN IN FULL CW POSITION.

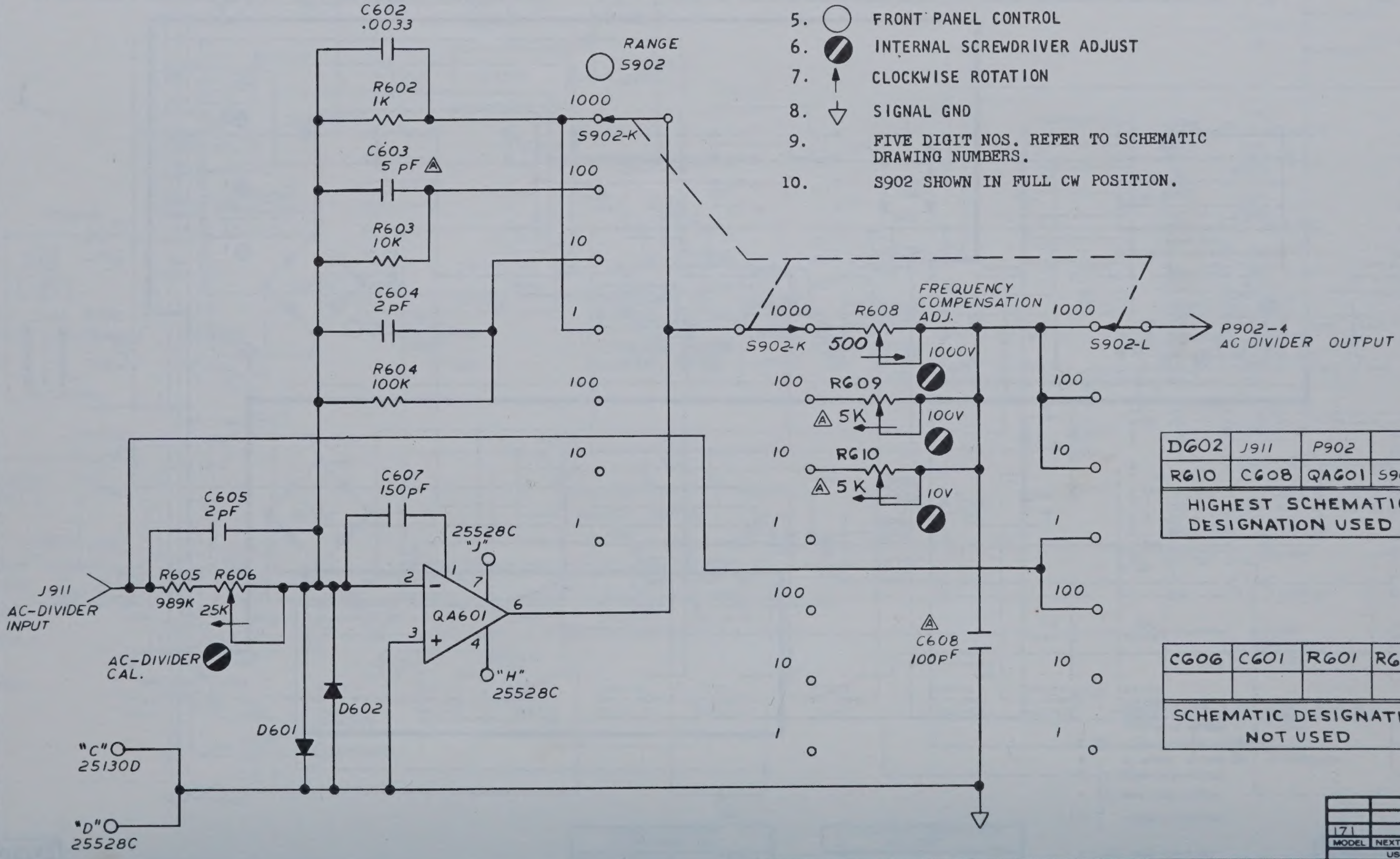

DG02	J911	P902	
R610	C608	QA601	S902
HIGHEST SCHEMATIC DESIGNATION USED			

CG06	C601	R601	R607
SCHEMATIC DESIGNATION NOT USED			

171		
MODEL	NEXT ASSEMBLY	QTY.
USED ON		

DO NOT SCALE THIS DRAWING

KEITHLEY INSTRUMENTS CLEVELAND, OHIO

DIMENSIONAL TOLERANCES UNLESS OTHERWISE SPECIFIED
XX = ± .015 ANG. = ±1°
XXX = ± .005 FRAC. = ±1/64
SURFACE MAX. 63

DATE 1-24-73 SCALE
DRN. T. G. ENG. APPR. WAN
MATERIAL
FINISH

TITLE SCHEMATIC, AC VOLTAGE DIVIDER

NO. 25131C

LTR.	ECO NO.	REVISION	DATE
A	4121	C1115 / C1114 WAS .0015	6-20-73

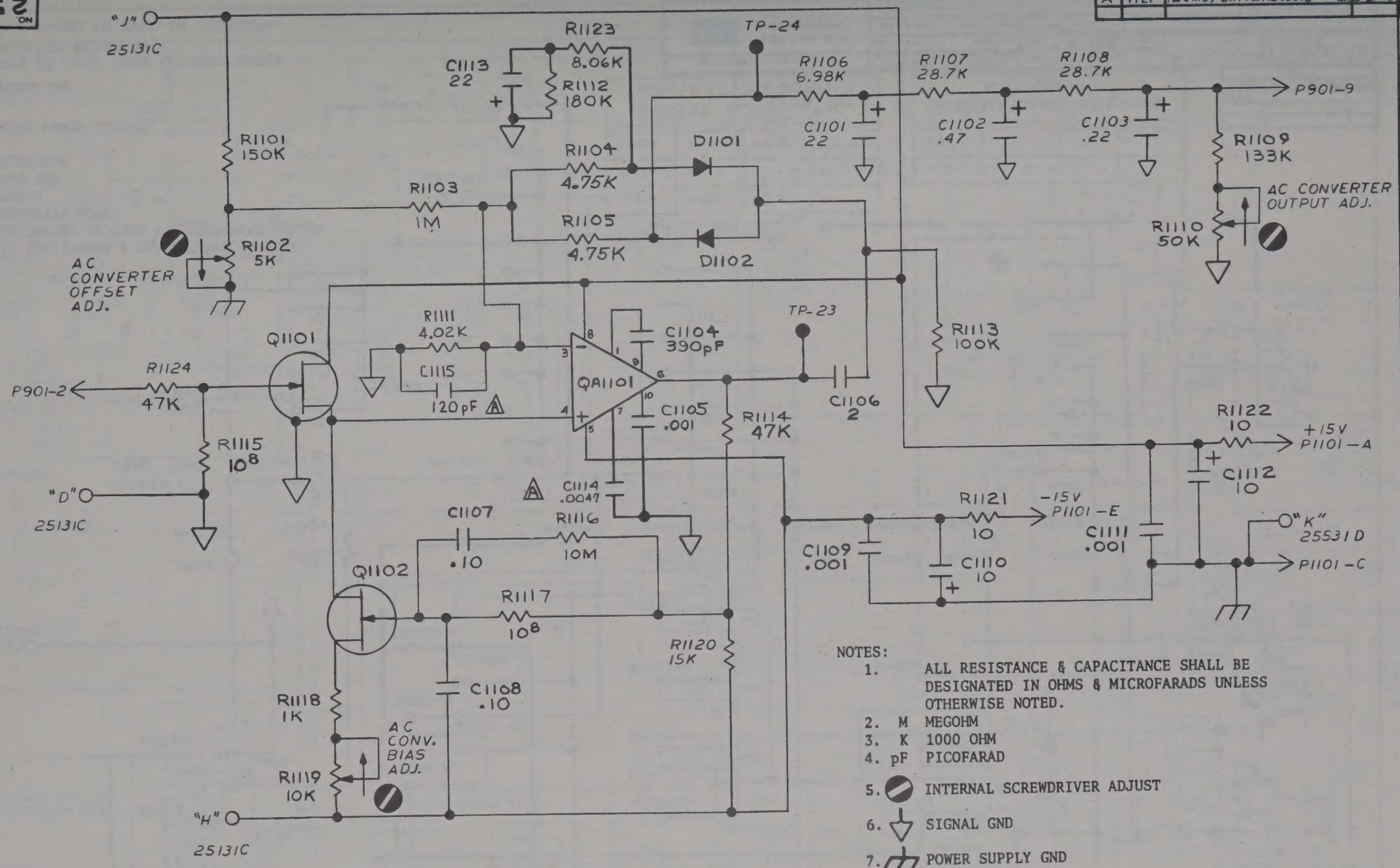

NOTES:

1. ALL RESISTANCE & CAPACITANCE SHALL BE DESIGNATED IN OHMS & MICROFARADS UNLESS OTHERWISE NOTED.
2. M MEGOHM
3. K 1000 OHM
4. pF PICOFARAD
5. INTERNAL SCREWDRIVER ADJUST
6. SIGNAL GND
7. POWER SUPPLY GND
8. CLOCKWISE ROTATION
9. FIVE DIGIT NOS. IN REFER TO SCHEMATIC DRAWING NUMBERS.

SCHEMATIC DESIGNATION NOT USED			

D1102	P902	P1101	
R1124	C1115	QA1101	Q1102
HIGHEST SCHEMATIC DESIGNATION USED			

MODEL	NEXT ASSEMBLY	QTY.
171		
USED ON		

DO NOT SCALE THIS DRAWING

KEITHLEY INSTRUMENTS CLEVELAND, OHIO

DIMENSIONAL TOLERANCES UNLESS OTHERWISE SPECIFIED
XX = ± .015 ANG. = ±1°
XXX = ± .005 FRAC. = ±1/64
SURFACE MAX. 63

DATE 1-24-73 | SCALE
DRN. T.G. | ENG. APPR. WAM
MATERIAL
FINISH

TITLE SCHEMATIC, AC CONVERTER

NO. 25528C

NO. 25528C

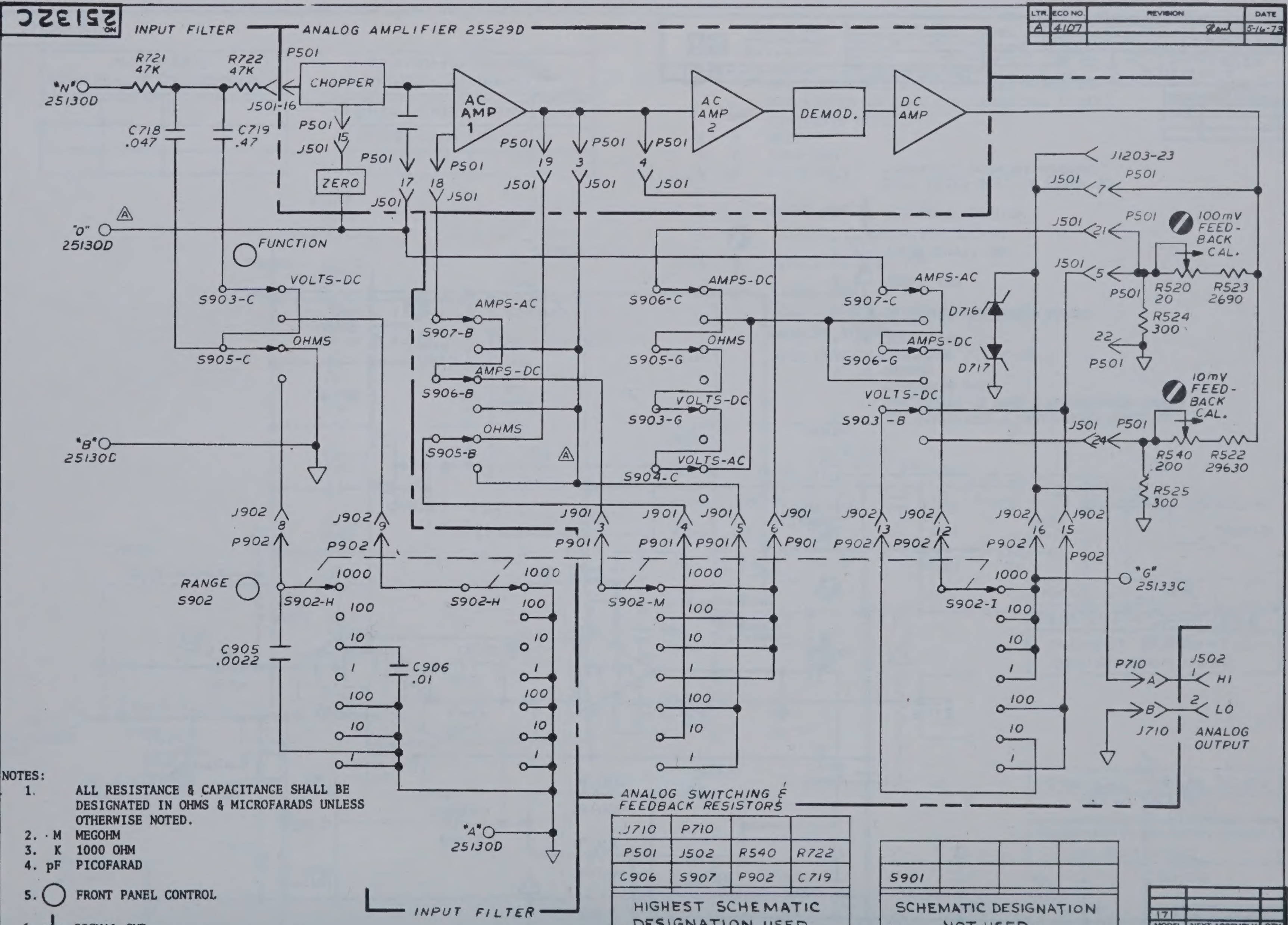

NOTES:

1. ALL RESISTANCE & CAPACITANCE SHALL BE DESIGNATED IN OHMS & MICROFARADS UNLESS OTHERWISE NOTED.
2. M MEGOHM
3. K 1000 OHM
4. pF PICOFARAD
5. ◯ FRONT PANEL CONTROL
6. ▽ SIGNAL GND
7. S903 TO S907 PUSH BUTTONS SHOWN IN RELEASED POSITION.
8. S902 SHOWN IN FULL CW POSITION.

J710	P710		
P501	J502	R540	R722
C906	S907	P902	C719

HIGHEST SCHEMATIC DESIGNATION USED

S901			

SCHEMATIC DESIGNATION NOT USED

LTR.	ECO NO.	REVISION	DATE
A	4107		5-16-73

MODEL	NEXT ASSEMBLY	QTY.
171		

USED ON

DO NOT SCALE THIS DRAWING

KEITHLEY INSTRUMENTS CLEVELAND, OHIO

DIMENSIONAL TOLERANCES UNLESS OTHERWISE SPECIFIED
XX = ±.015 ANG. = ±1°
XXX = ±.005 FRAC. = ±1/64
SURFACE MAX.

DATE 1-24-73 SCALE
DRN. T. G. ENG. APPR. WAH
MATERIAL
FINISH

TITLE SCHEMATIC, ANALOG SWITCHING

NO. 25132C

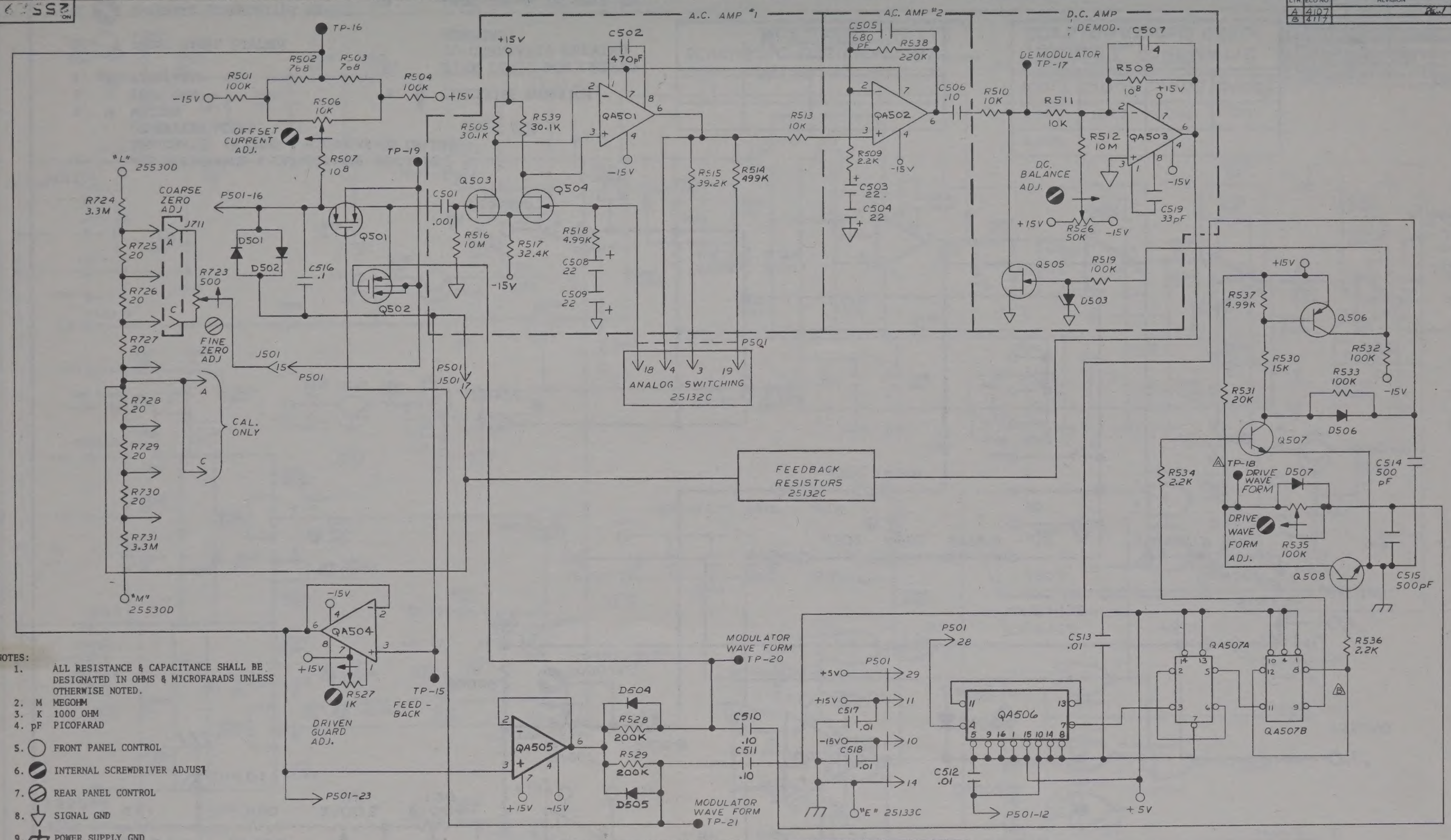

	J902		
R539	R731	C719	P902
Q508	QA507	D507	C519

HIGHEST SCHEMATIC DESIGNATIONS USED

SCHEMATIC DESIGNATIONS NOT USED

NOTES:

1. ALL RESISTANCE & CAPACITANCE SHALL BE DESIGNATED IN OHMS & MICROFARADS UNLESS OTHERWISE NOTED.
2. M MEGOHM
3. K 1000 OHM
4. pF PICOFARAD
5. ◯ FRONT PANEL CONTROL
6. INTERNAL SCREWDRIVER ADJUST
7. REAR PANEL CONTROL
8. SIGNAL GND
9. POWER SUPPLY GND
10. ✱ INDICATES NOMINAL VALUE DETERMINED DURING FINAL CALIBRATION.
11. CLOCKWISE ROTATION
12. FIVE DIGIT NOS. IN BLOCKS REFER TO SCHEMATIC DRAWING NUMBERS.

LTR	ECO NO.	REVISION	DATE
A	4107		5-16-73
B	4117		6-8-73

MODEL	NEXT ASSEMBLY	QTY
171		1

USED ON

DO NOT SCALE THIS DRAWING

KEITHLEY INSTRUMENTS CLEVELAND, OHIO

DIMENSIONAL TOLERANCES UNLESS OTHERWISE SPECIFIED
XX = ± .015 ANG. = ±1°
XXX = ± .005 FRAC. = ±1/64
SURFACE MAX.

DATE 1-24-73 SCALE —
DRN. RGJ ENG. APPR.
MATERIAL
FINISH

TITLE SCHEMATIC, ANALOG AMPLIFIER

NO. 25529D

LTR.	ECO NO.	REVISION	DATE
A	4107		5-16-73
B	4198	REVISED E-3; C-4,5;	11-20-73

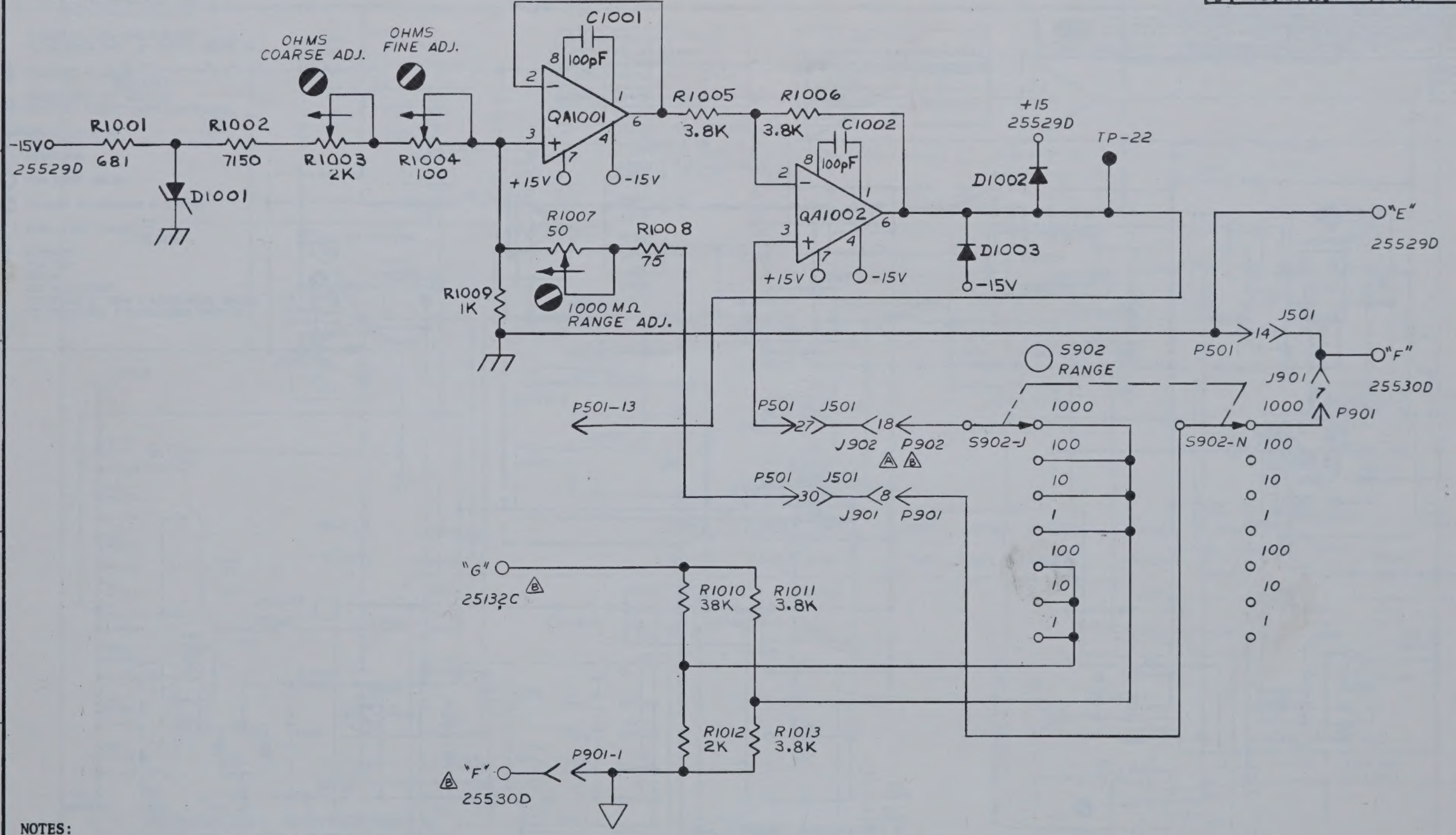

NOTES:

1. ALL RESISTANCE & CAPACITANCE SHALL BE DESIGNATED IN OHMS & MICROFARADS UNLESS OTHERWISE NOTED.
2. M MEGOHM
3. K 1000 OHM
4. pF PICOFARAD
5. ◯ FRONT PANEL CONTROL
6. INTERNAL SCREWDRIVER ADJUST
7. POWER SUPPLY GND
8. CLOCKWISE ROTATION
9. FIVE DIGIT NOS. REFER TO SCHEMATIC DRAWING NUMBERS.
10. S902 SHOWN IN FULL CW POSITION.

SCHEMATIC DESIGNATIONS NOT USED

S902			
P902	J902	P501	J501
R1013	C1002	D1003	QA1002

HIGHEST SCHEMATIC DESIGNATIONS USED

MODEL	NEXT ASSEMBLY	QTY.
171		
USED ON		

DO NOT SCALE THIS DRAWING

KEITHLEY INSTRUMENTS
CLEVELAND, OHIO

DIMENSIONAL TOLERANCES UNLESS OTHERWISE SPECIFIED		DATE 1-24-73	SCALE —
XX = ±.015	ANG. = ±1°	DRN. RGJ	ENG. APPR. WAN
XXX = ±.005	FRAC. = ±1/64	MATERIAL	
SURFACE MAX. 63		FINISH	

TITLE SCHEMATIC, OHMS CONVERTER

NO. 25133C

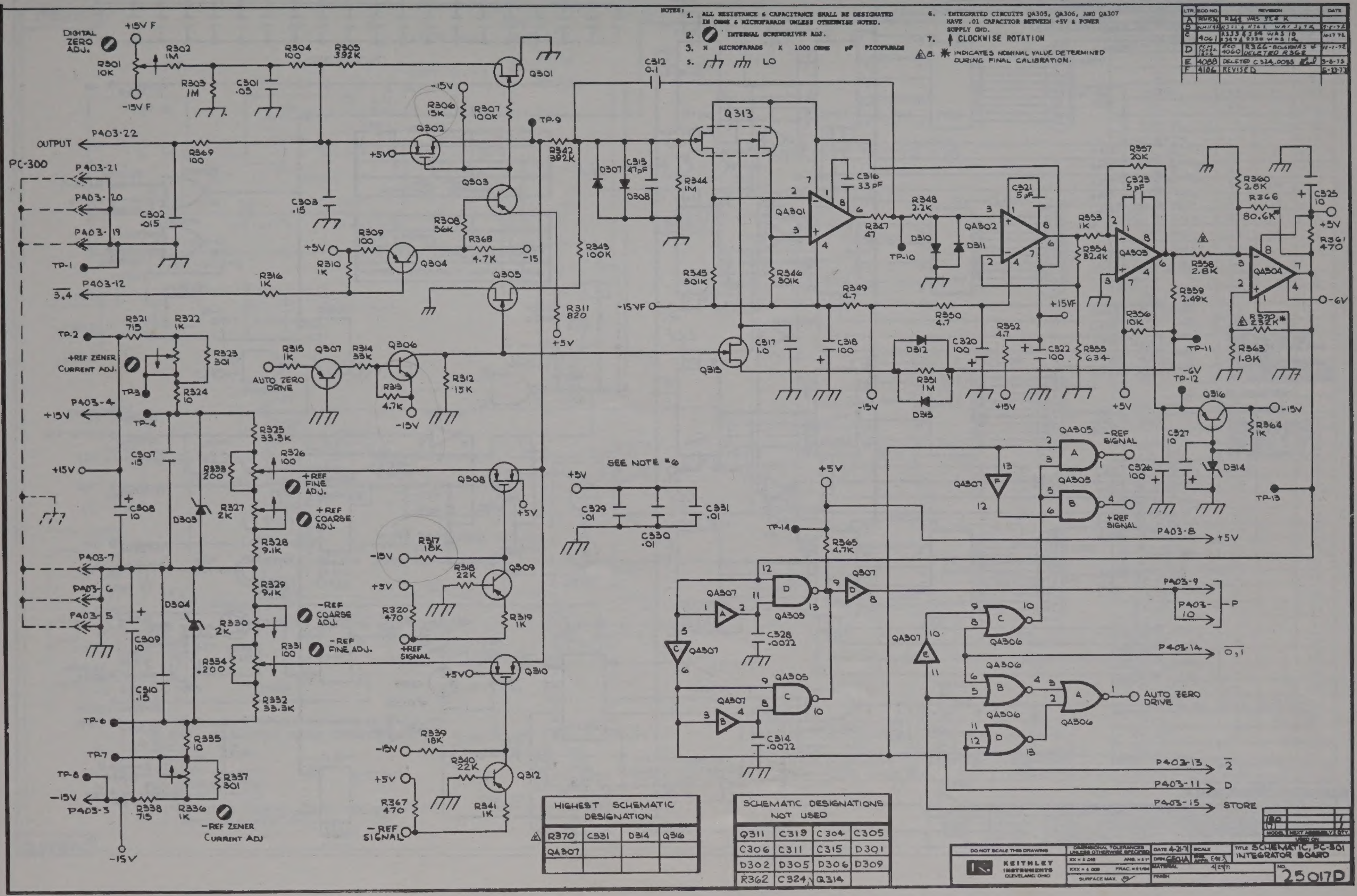
NOTES:
1. ALL RESISTANCE & CAPACITANCE SHALL BE DESIGNATED IN OHMS & MICROFARADS UNLESS OTHERWISE NOTED.
2. INTERNAL SCREWDRIVER ADJ.
3. M MICROFARADS K 1000 OHMS pF PICOFARADS
5. LO
6. INTEGRATED CIRCUITS QA305, QA306, AND QA307 HAVE .01 CAPACITOR BETWEEN +5V & POWER SUPPLY GND.
7. CLOCKWISE ROTATION
8. ✱ INDICATES NOMINAL VALUE DETERMINED DURING FINAL CALIBRATION.
LTR. | ECO NO. | REVISION | DATE
A | RCM536 | R342 WAS 324 K |
B | RCM1142 | R301 & R342 WAS 3,9 K | 9-8-72
C | 4061 | R333 & R334 WAS 10, R327 & R330 WAS 1K | 10-17-72
D | PCM 1606A 1806 | ECO 4060 R366-80.6K WAS ✱ DELETED R362 | 11-1-72
E | 4088 | DELETED C324,.0033 | 3-8-73
F | 4106 | REVISED | 6-13-73
DIGITAL ZERO ADJ.
R301 10K
+15V F
-15V F
R302 1M
R303 1M
C301 .05
R304 100
R305 392K
Q301
C312 0.1
Q313
OUTPUT
P403-22
R369 100
PC-300
P403-21
P403-20
P403-19
C302 .015
TP-1
P403-12
3,4
R316 1K
C308 .15
-15V
R306 15K
R307 100K
+5V
Q302
TP-9
Q303
R342 392K
R308 56K
R368 4.7K
-15
R309 100
R310 1K
Q304
Q305
R343 100K
R311 820
+5V
D307
C313 47pF
D308
R344 1M
R345 301K
R346 301K
QA301
C316 3.3pF
R347 47
R348 2.2K
TP-10
D310
D311
QA302
C321 5pF
R353 1K
R354 32.4K
R357 20K
C323 5pF
QA303
R358 2.8K
R359 2.49K
R356 10K
R355 634
R360 2.8K
R366 80.6K✱
C325 10
+5V
R361 470
QA304
-6V
R370 232K✱
R363 1.8K
TP-11
-6V TP-12
-15VF
R349 4.7
R350 4.7
R352 4.7
+15VF
C317 1.0
C318 100
C320 100
C322 100
D312
R351 1M
D313
Q315
-15V
+15V
TP-2
R321 715
R322 1K
R323 301
+REF ZENER CURRENT ADJ.
TP-3
R324 10
P403-4
+15V
TP-4
R315 1K
Q307
R314 33K
Q306
R313 4.7K
R312 15K
AUTO ZERO DRIVE
C307 .15
R325 33.3K
R333 200
R326 100
+REF FINE ADJ.
Q308
R327 2K
+REF COARSE ADJ.
D303
C308 10
R328 9.1K
P403-7
R329 9.1K
P403-6
P403-5
D304
R330 2K
-REF COARSE ADJ.
R331 100
-REF FINE ADJ.
R334 .200
C309 10
C310 .15
R332 33.3K
TP-6
TP-7
R335 10
R337 301
TP-8
R338 715
R336 1K
-REF ZENER CURRENT ADJ
P403-3
R317 18K
R318 22K
Q309
R320 470
R319 1K
+REF SIGNAL
Q310
R339 18K
R340 22K
Q312
R367 470
R341 1K
-REF SIGNAL
SEE NOTE #6
C329 .01
C330 .01
C331 .01
Q316
R364 1K
C327 10
C326 100
D314
TP-13
QA305
-REF SIGNAL
QA307
+REF SIGNAL
P403-8
TP-14
R365 4.7K
C328 .0022
C314 .0022
QA306
P403-9
P403-10
P
P403-14
0,1
AUTO ZERO DRIVE
P403-13
2
P403-11
D
P403-15
STORE
HIGHEST SCHEMATIC DESIGNATION
R370 | C331 | D314 | Q316
QA307
SCHEMATIC DESIGNATIONS NOT USED
Q311 | C319 | C304 | C305
C306 | C311 | C315 | D301
D302 | D305 | D306 | D309
R362 | C324 | Q314
DO NOT SCALE THIS DRAWING
KEITHLEY INSTRUMENTS CLEVELAND, OHIO
DATE 4-21-71
TITLE SCHEMATIC, PC-301 INTEGRATOR BOARD
25017D

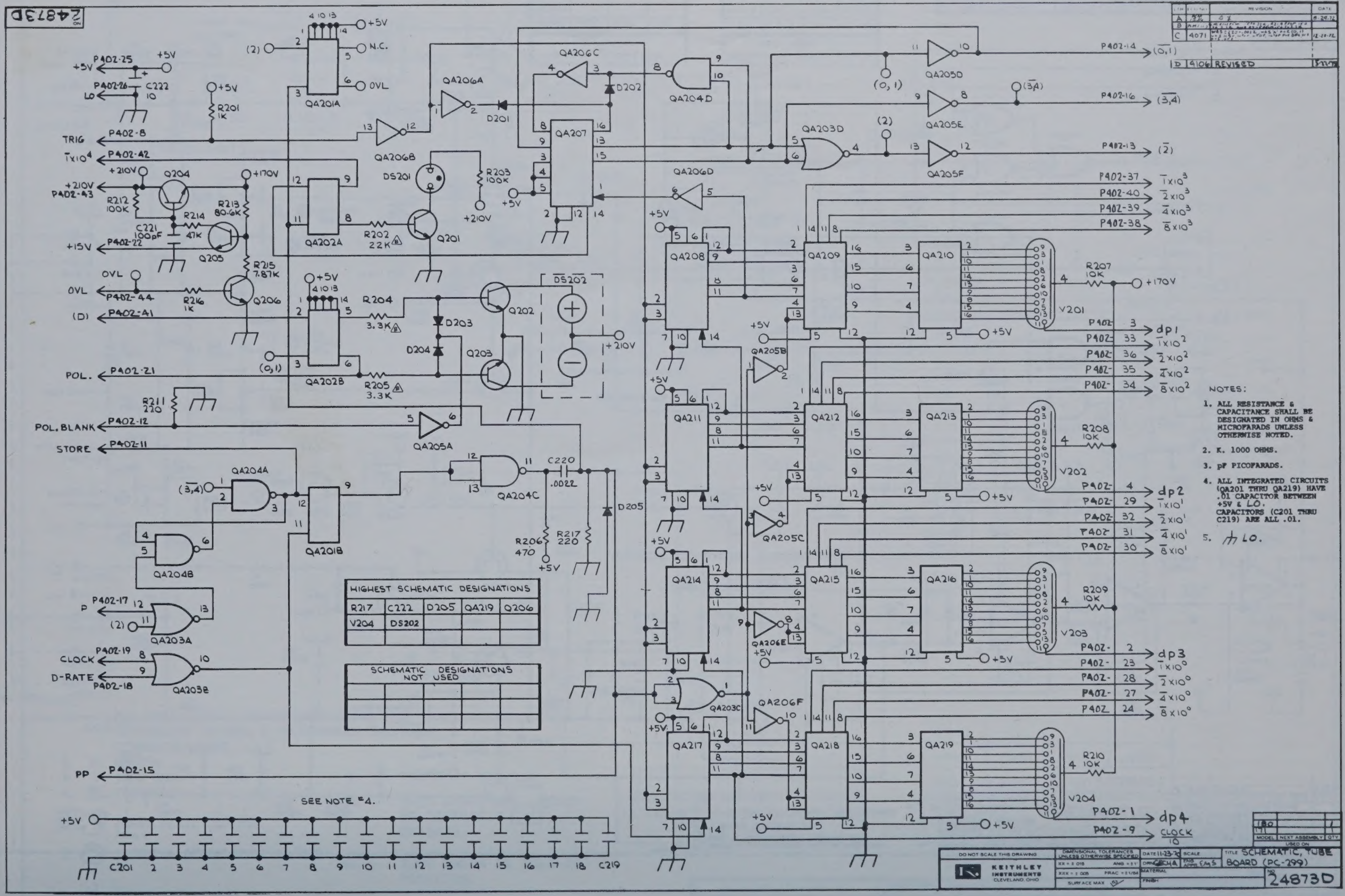
24873D
TRIG
$\bar{1}$x10^4
+5V
LO
+210V
+15V
OVL
(D)
POL.
POL. BLANK
STORE
P
CLOCK
D-RATE
PP
P402-25
P402-26
P402-8
P402-42
P402-43
P402-22
P402-44
P402-41
P402-21
P402-12
P402-11
P402-17
P402-19
P402-18
P402-15
QA201A
QA201B
QA202A
QA202B
QA203A
QA203B
QA203C
QA203D
QA204A
QA204B
QA204C
QA204D
QA205A
QA205B
QA205C
QA205D
QA205E
QA205F
QA206A
QA206B
QA206C
QA206D
QA206E
QA206F
QA207
QA208
QA209
QA210
QA211
QA212
QA213
QA214
QA215
QA216
QA217
QA218
QA219
Q201
Q202
Q203
Q204
Q205
Q206
DS201
DS202
D201
D202
D203
D204
D205
R201 1K
R202 22K
R203 100K
R204 3.3K
R205 3.3K
R206 470
R207 10K
R208 10K
R209 10K
R210 10K
R211 220
R212 100K
R213 80.6K
R214 47K
R215 7.87K
R216 1K
R217 220
C220 .0022
C221 100pF
C222 10
V201
V202
V203
V204
+170V
N.C.
(0,1)
($\overline{0,1}$)
($\overline{3,4}$)
($\bar{2}$)
P402-14
P402-16
P402-13
P402-37
P402-40
P402-39
P402-38
$\bar{1}$x10^3
$\bar{2}$x10^3
$\bar{4}$x10^3
$\bar{8}$x10^3
dp1
dp2
dp3
dp4
CLOCK 10
SEE NOTE #4.
C201 2 3 4 5 6 7 8 9 10 11 12 13 14 15 16 17 18 C219
HIGHEST SCHEMATIC DESIGNATIONS
R217 C222 D205 QA219 Q206
V204 DS202
SCHEMATIC DESIGNATIONS NOT USED
NOTES:
1. ALL RESISTANCE & CAPACITANCE SHALL BE DESIGNATED IN OHMS & MICROFARADS UNLESS OTHERWISE NOTED.
2. K. 1000 OHMS.
3. pF PICOFARADS.
4. ALL INTEGRATED CIRCUITS (QA201 THRU QA219) HAVE .01 CAPACITOR BETWEEN +5V & LO. CAPACITORS (C201 THRU C219) ARE ALL .01.
5. LO.
REVISION
D 4106 REVISED
DO NOT SCALE THIS DRAWING
KEITHLEY INSTRUMENTS CLEVELAND, OHIO
TITLE SCHEMATIC, TUBE BOARD (PC-299)
24873D

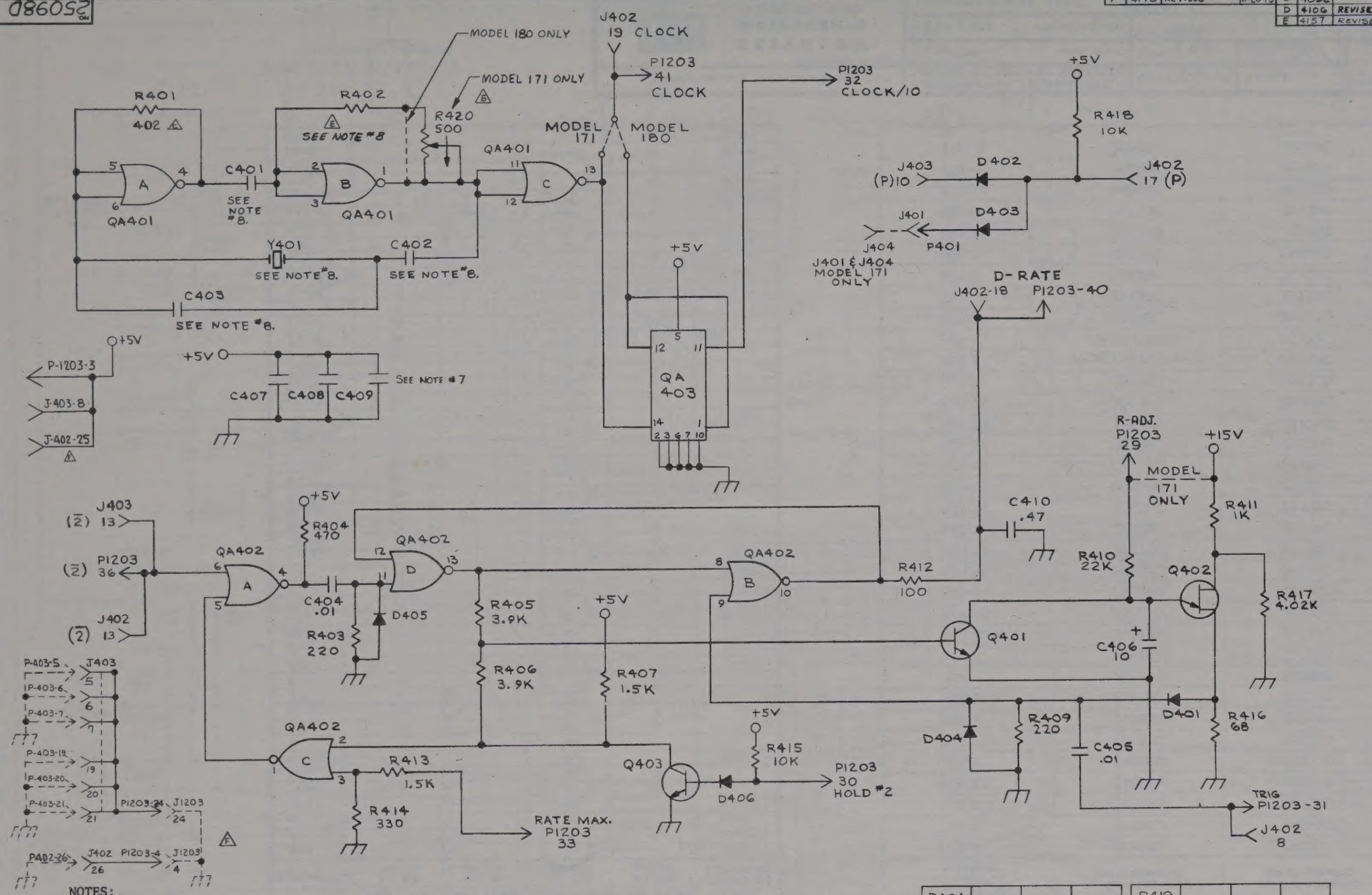

CONNECTIONS	P1203	J403	J402
P		10	17
D		11	41
+15V	44	4	22
POL	43		21
CLOCK	41		19
D-RATE	40		18
-15V	39	3	
P-P	38		15
$\overline{0,1}$	37	14	14
$\overline{2}$	36	13	13
POL. BLANK	35		12
STORE	34	15	11
RATE MAX	33		
CLOCK / 10	32		
TRIG	31		8
HOLD #2	30		
R- ADJ.	29		
dp 2	28		4
dp 1	27		3
dp 3	26		2
dp 4	25		1
OUTPUT	23	22	
OVL	22		44
+210V	21		43
$\overline{1} \times 10^4$	20		42
$\overline{3,4}$	19	12	16
$\overline{2} \times 10^3$	18		40
$\overline{4} \times 10^3$	17		39
$\overline{8} \times 10^3$	16		38
△ $\overline{1} \times 10^3$	15		37
$\overline{2} \times 10^2$	14		36
$\overline{4} \times 10^2$	13		35
$\overline{8} \times 10^2$	12		34
$\overline{1} \times 10^2$	11		33
$\overline{2} \times 10^1$	10		32
$\overline{4} \times 10^1$	9		31
$\overline{8} \times 10^1$	8		30
$\overline{1} \times 10^1$	7		29
$\overline{2} \times 10^0$	6		28
$\overline{4} \times 10^0$	5		27
LO	4,24	5,6,7,19,20,21	26
+5V	3	8	25
$\overline{8} \times 10^0$	2		24
$\overline{1} \times 10^0$	1		23
SIGNAL NAME	PC-300 PINS	PC-301 PINS	PC-299 PINS

P401			
Q403	QA403	Y401	J404
C410	D406	R420	
HIGHEST SCHEMATIC DESIGNATIONS USED			

R419			
R408			
SCHEMATIC DESIGNATIONS NOT USED			

NOTES:

1. ALL RESISTANCE & CAPACITANCE SHALL BE DESIGNATED IN OHMS & MICROFARADS UNLESS OTHERWISE NOTED.
2. K 1000 OHM
3. pF PICOFARAD
4. KHz KILOHERTZ
5. CLOCKWISE ROTATION
6. FRONT PANEL CONTROL
7. ALL INTEGRATED CIRCUITS (QA401 THRU QA403) HAVE .01 CAPACITOR BETWEEN +5V & LO.
8. MODEL 180
   200 KHz C401- .033, C402- .033, C403- .0039, Y401- 200KHz, R402 - 402
   MODEL 171
   100 KHz C401- .05 △, R402- 301 △, C402- .068, C403- .01, Y401- 100 KHz △
9. LO
10. FOR SCHEMATIC INTERCONNECTIONS SEE DETAILS, CONNECTOR INTERCONNECTION #26237B.

F	4198	REVISED		11-20-73
C	4092			4-3-73
D	4106	REVISED		5-22-73
E	4157	REVISED		8-27-73
A				
B	4071	REVISED		

MODEL 171, 180

DO NOT SCALE THIS DRAWING. KEITHLEY INSTRUMENTS, CLEVELAND, OHIO. DIMENSIONAL TOLERANCES UNLESS OTHERWISE SPECIFIED: XX = ±.015, XXX = ±.005, ANG. = ±1°, FRAC. = ±1/64. DATE 10-25-72. DRN. RGJ.

TITLE SCHEMATIC, PC-300 (INTERCONNECT)

NO. 25098D

26237B NO.

LTR.	ECO NO.	REVISION	DATE
A	4198	NEW DWG. RELEASE	12-18-73

CONNECTOR INTERCONNECTION DETAILS

P.C. BOARD INTERCONNECTIONS: PC275, PC299, PC300, PC301 and PC305

LINE DESCRIPTION	P402 / J402	P403 / J403	P1203 / J1203	P1202 / J1202	OTHER SCHEMATIC LOCATIONS
	P.C. 299 24873D	P.C. 301 25017D	P.C. 300 25098D	P.C. 275 24866D	
dp 4	1		25		25531D
dp 3	2		26		25531D
dp 1	3		27		25531D
dp 2	4		28		25531D
Trig	8		31	23	
Store	11	15	34	6	
Pol. Blank	12		35		25531D
$\bar{2}$	13	13	36		
$\overline{0, 1}$	14	14	37	5	
P - P	15		38	2	
$\overline{3, 4}$	16	12	19		
P	17	10			
D-Rate	18		40		
Clock	19		41	25	
Pol	21		43	27	
+ 15	22	4	44		25530D
$\bar{1} \times 10^0$	23		1	38	
$\bar{8} \times 10^0$	24		2	12	
+ 5	25	8	3	17	25530D
L_o	26		4	34	25530D
$\bar{4} \times 10^0$	27		5	11	
$\bar{2} \times 10^0$	28		6	37	
$\bar{1} \times 10^1$	29		7	10	
$\bar{8} \times 10^1$	30		8	9	
$\bar{4} \times 10^1$	31		9	8	
$\bar{2} \times 10^1$	32		10	7	
$\bar{1} \times 10^2$	33		11	28	
$\bar{8} \times 10^2$	34		12	29	
LO		5,6,7,19,20,21	24		25530D
$\bar{4} \times 10^2$	35		13	30	
$\bar{2} \times 10^2$	36		14	31	
$\bar{1} \times 10^3$	37		15	32	
$\bar{8} \times 10^3$	38		16	33	
$\bar{4} \times 10^3$	39		17	35	
$\bar{2} \times 10^3$	40		18	36	
D	41	11			
$\bar{1} \times 10^4$	42		20	19	
+ 210 V_1	43		21		25530D
OVL	44		22	18	
−15		3	39		25530D
Output		22	23		25132C
Hold #2			30	1	
No Range				3	25531D
DP-01				39	25531D
DP-02				40	25531D
DP-03				41	25531D
DP-04				42	25531D

P.C. BOARD INTERCONNECTION CHART

PLUG AND JACK CONNECTOR NUMBER	PLUG (P) LOCATED ON SCHEMATIC	JACK (J) LOCATED ON SCHEMATIC
106-A	24866D	25531D
106-B	24866D	25531D
106-C	24866D	25531D
106-D	24866D	25531D
106-E	24866D	25531D
106-F	24866D	25531D
106-G	24866D	25531D
106-H	24866D	25531D
404	25531D	25098D
501-3	25529D	25132C
501-4	25529D	25132C
501-10	25529D	25530D
501-11	25529D	25530D
501-12	25529D	25530D
501-13	25133C	25130D
501-14	25529D	25530D
501-16	25529D	25132C
501-18	25529D	25132C
501-19	25529D	25132C
501-22	25132C	25530D
501-23	25529D	25130D
501-28	25529D	25098D
501-29	25529D	25530D
502-1	ANALOG OUTPUT REAR PANEL	25132C
502-2		25132C
707-F	25530D	25531D
911	25130D	25131C
901-2	25528C	25130D
901-9	25528C	25130D
901-14	25531D	25530D
902-4	25131C	25130D
1101-A	25528C	25530D
1101-C	25528C	25530D
1101-E	25528C	25530D

NOTE: 5 DIGIT NO'S IDENTIFY SCHEMATIC DRAWING

MODEL	NEXT ASSEMBLY	QTY.
171		

USED ON

DO NOT SCALE THIS DRAWING

KEITHLEY INSTRUMENTS
CLEVELAND, OHIO

DIMENSIONAL TOLERANCES UNLESS OTHERWISE SPECIFIED
XX = ± .015 ANG. = ±1°
XXX = ± .005 FRAC. = ±1/64
SURFACE MAX. 63

DATE 12-18-73
DRN. JAG
SCALE
ENG. APPR. DW
MATERIAL
FINISH

TITLE DETAILS, CONNECTOR INTERCONNECTION

NO. 26237B

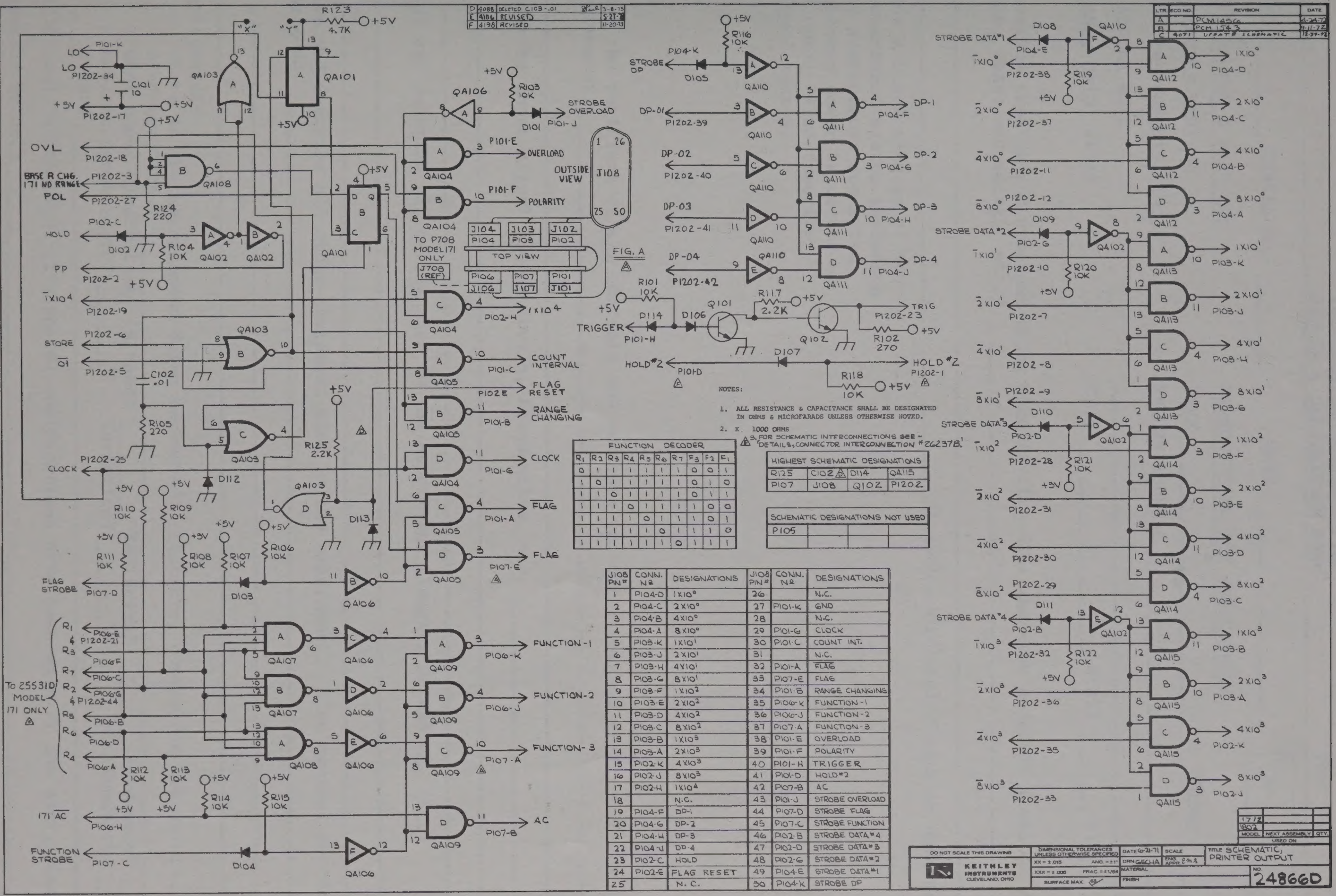

D	4088	DELETED C103 - .01	3-8-73
E	4186	REVISED	5-27-7
F	4198	REVISED	11-20-73

LTR	ECO NO.	REVISION	DATE
A		PCM1456	4-24-72
B		PCM 1543	9-11-72
C	4071	UPDATE SCHEMATIC	12-29-72

NOTES:

1. ALL RESISTANCE & CAPACITANCE SHALL BE DESIGNATED IN OHMS & MICROFARADS UNLESS OTHERWISE NOTED.
2. K. 1000 OHMS
3. FOR SCHEMATIC INTERCONNECTIONS SEE - 'DETAILS, CONNECTOR INTERCONNECTION #26237B.'

FUNCTION DECODER									
R_1	R_2	R_3	R_4	R_5	R_6	R_7	F_3	F_2	F_1
0	1	1	1	1	1	1	0	0	1
1	0	1	1	1	1	1	0	1	0
1	1	0	1	1	1	1	0	1	1
1	1	1	0	1	1	1	1	0	0
1	1	1	1	0	1	1	1	0	1
1	1	1	1	1	0	1	1	1	0
1	1	1	1	1	1	0	1	1	1

HIGHEST SCHEMATIC DESIGNATIONS			
R125	C102	D114	QA115
P107	J108	Q102	P1202

SCHEMATIC DESIGNATIONS NOT USED			
P105			

J108 PIN #	CONN. NO	DESIGNATIONS	J108 PIN #	CONN. NO	DESIGNATIONS
1	P104-D	1X10⁰	26		N.C.
2	P104-C	2X10⁰	27	P101-K	GND
3	P104-B	4X10⁰	28		N.C.
4	P104-A	8X10⁰	29	P101-G	CLOCK
5	P103-K	1X10¹	30	P101-C	COUNT INT.
6	P103-J	2X10¹	31		N.C.
7	P103-H	4X10¹	32	P101-A	$\overline{FLAG}$
8	P103-G	8X10¹	33	P107-E	FLAG
9	P103-F	1X10²	34	P101-B	RANGE CHANGING
10	P103-E	2X10²	35	P106-K	FUNCTION-1
11	P103-D	4X10²	36	P106-J	FUNCTION-2
12	P103-C	8X10²	37	P107-A	FUNCTION-3
13	P103-B	1X10³	38	P101-E	OVERLOAD
14	P103-A	2X10³	39	P101-F	POLARITY
15	P102-K	4X10³	40	P101-H	TRIGGER
16	P102-J	8X10³	41	P101-D	HOLD #2
17	P102-H	1X10⁴	42	P107-B	AC
18		N.C.	43	P101-J	STROBE OVERLOAD
19	P104-F	DP-1	44	P107-D	STROBE FLAG
20	P104-G	DP-2	45	P107-C	STROBE FUNCTION
21	P104-H	DP-3	46	P102-B	STROBE DATA #4
22	P104-J	DP-4	47	P102-D	STROBE DATA #3
23	P102-C	HOLD	48	P102-G	STROBE DATA #2
24	P102-E	FLAG RESET	49	P104-E	STROBE DATA #1
25		N. C.	50	P104-K	STROBE DP

MODEL	NEXT ASSEMBLY	QTY.
1712		
1802		

USED ON

DO NOT SCALE THIS DRAWING

KEITHLEY INSTRUMENTS CLEVELAND, OHIO

DIMENSIONAL TOLERANCES UNLESS OTHERWISE SPECIFIED
XX = ± .015 ANG. = ±1°
XXX = ± .005 FRAC. = ±1/64
SURFACE MAX 63

DATE 6-21-71 SCALE
DRN GECHA ENG. APPR.
MATERIAL
FINISH

TITLE SCHEMATIC, PRINTER OUTPUT

NO. 24866D

KEITHLEY INSTRUMENTS, INC.
REPAIR & CALIBRATION FORM

PO#

MODEL NO. ________ SERIAL NO. ________ DATE ____________________ R-

SHIP INSTRUMENT & FORM TO:

SALES SERVICE DEPT.
KEITHLEY INSTRUMENTS, INC.
28775 AURORA ROAD
CLEVELAND, OHIO 44139

PERSON USING THE INSTRUMENT:

NAME ____________________ PHONE ________

RETURN ADDRESS ____________________

____

CITY ____________ STATE ______ ZIP ______

1. Describe problem and symptoms using quantitative data whenever possible (enclose readings, chart recordings, etc.) ____________________

____

____________________(Attach additional sheets as necessary).

2. Show a block diagram of your measurement system including all instruments connected (whether power is turned on or not). Also describe signal source.

3. List the positions of all controls and switches on both front and rear panels of the instrument. ____________________

____

4. Describe input signal source levels, frequencies, etc. ____________________

____

____

5. List and describe all cables used in the experiment (length, shielding, etc.)

____

____

6. List and describe all other equipment used in the experiment. Give control settings for each. ____________________

____

____

7. Environment:

Where is the measurement being performed? (Factory, controlled laboratory, out-of-doors, etc.) ____________________

What power line voltage is used? ________ Variation? ________ Frequency? ______

Ambient temperature? ______°F. Variation? ______°F. Rel. Humidity? ______

Other? ____________________

8. Additional Information. (If special modifications have been made by the user, please describe below.) ____________________

____

Rev. 0773

Listed and defined below are the four types of calibrations and their associated report formats which are presently available at Keithley Instruments. They fall into the following categories:

1. Report of Calibration Certified Traceable to the National Bureau of Standards
2. Calibration Report
3. Certificate of Compliance
4. Recalibration

All calibration and certification performed by Keithley Instruments is in accord with MIL-C-45662A.

Prices shown below are in addition to repair charges for any work necessary to place a customer's unit into first class condition prior to the calibration.

1. Report of Calibration Certified Traceable to the National Bureau of Standards.
This is a completely documented report, including all basic errors or deviations from nominal settings on appropriate ranges, terminals, dials, etc. Work is performed using the primary standards of the company with secondary transfers kept to a minimum. The NBS test numbers for the latest recalibration of the primary standards are furnished.

By definition, the above is performed in our Standards Laboratory so that random operator induced error is minimized and maximum protection to the equipment used is maintained.

This type of calibration is not recommended for instruments with a basic inaccuracy of 1% or greater. The precision involved in this report makes it uneconomical for such instruments. The Calibration Report listed below (No. 2) would be better suited in this case.

The Report of Calibration Certified Traceable to the National Bureau of Standards is available on the following instruments at the prices listed:

Model 140	$275	Model 5155-10^8	$ 50
Model 260	$225	Model 5155-10^9	$ 50
Model 261	$375	Model 5155-10^{10}	$ 50
Model 662	$275	Model 5155-10^{11}	$ 60
Model 5155 (Complete Set)	$295	Model 5155-10^{12}	$ 60
		Model 5155-10^{13}	$ 80

2. Calibration Report.
This report shows only the cardinal range, terminal, dial, etc. errors as determined by production calibration equipment and personnel. The production equipment is maintained traceable by transfer techniques against the primary standards maintained by the company. We attest to this fact and list basic deviations from nominal but the conditions of calibration are not as precisely controlled as the previous report nor are NBS test numbers supplied.

This report is available for any instrument in our line. The following price has been established for this report:

Model 261 . . . .$ 60
Prices for other units can be estimated upon request.

3. Certificate of Compliance.
This is merely a restatement of the basic guarantee that the instrument was calibrated on equipment that is maintained by our standards personnel against primary standards. No report is issued.

This Certificate of Compliance is available at no charge for any instrument with the exception of the Model 261.

A newly purchased Model 261 or one returned for repair or recalibration is automatically supplied with a Calibration Report (as described in (2) above). The nature of this instrument makes it necessary to complete this report to ascertain specified accuracy. This Calibration Report is forwarded to the customer with the instrument. The $60 charge is incorporated as part of the normal calibration charge of the Model 261.

4. Recalibration.
This is a recalibration of the instrument according to our factory calibration procedures.

Model 260 . . . .$ 90 (No report supplied. A Certificate of Compliance can be had at no charge if requested).

Model 261 . . . .$ 60 (Calibration Report as described in (2) above is supplied. See (3) for explanation).

All other instruments are on a time and material basis for the particular unit involved.

All prices subject to change without prior notification.

KEITHLEY INSTRUMENTS, INC.

28775 AURORA ROAD • CLEVELAND, OHIO 44139 • (216) 248-0400
TELEX: 98-5469 • CABLE: KEITHLEY